SHARP SERVICE MANUAL

OUTSTANDING RECEPTION THE WORLD OVER

VZ-2000
VZ-2000X
VZ-2000XA

ATSM182002MCT

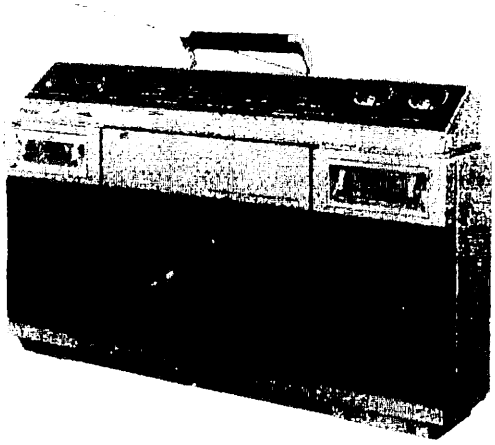

(The record in the photo is not included.)
Photo: VZ-2000

VZ-2000
VZ-2000X
VZ-2000XA

In the interests of user-safety the set should be restored to its original condition and only parts identical to those specified be used.

DOLBY SYSTEM ®

Noise reduction system manufactured under license from Dolby Laboratories Licensing Corporation. "Dolby" and the double-D symbol are trademarks of Dolby Laboratories Licensing Corporation.

APSS
Auto Program Search System

INDEX TO CONTENTS

FEATURES

- Automatic playing of both sides of a record.
- Fully automatic control of the turntable with micro-computer and linear tracking mechanism.
- Vertical record player with slim design to save space.
- APSS (Auto Program Search System).
- Dolby NR system.
- 3-way power source operation.

SHARP CORPORATION
SHARP ELECTRONICS CORPORATION

SERVICE MANUAL

SHARP CORPORATION
SHARP ELECTRONICS CORPORATION

FOR A COMPLETE DESCRIPTION OF THE OPERATION OF THIS UNIT, PLEASE REFER TO THE OPERATION MANUAL.

SPECIFICATIONS

General

Power source: VZ-2000	AC; 120, 220 V, 50/60 Hz DC; Internal (Batteries): Ten "D" size DC; External: 15 V
Power source: VZ-2000X/XA	AC; 110, 127, 220, 240 V, 50/60 Hz DC; Internal (Batteries): Ten UM/SUM-1 or R20 size DC; External: 15 V
Power consumption:	60 W
Dimensions:	Width; 738 mm (29-1/16") Height; 459 mm (18-1/16") Depth; 193 mm (7-29/32")
Weight:	16.5 kg (36.5 lbs.) without batteries
Input jacks:	Micropnone: 1 mV/600 Ω, ϕ6.3 mm jack Aux input: 120 mV, 47 kΩ
Output jacks:	Mixing output: 100 mV, 47 kΩ External speaker: 4 – 8 Ω RCA jack Headphones: 8 Ω, ϕ6.3 mm jack
Other jacks:	FM antenna: outside antenna AM antenna: outside antenna Ground: AM antenna ground
Semiconductors:	1 LSI, 16 ICs, 1 FET, 62 transistors, 44 diodes, 9 LEDs, 3 photo-interruptors, 2 infrared LEDs, 2 LED arrays

Amplifier Section

Circuit:	Multi-channel amplifier
Output power: VZ-2000	Mainspeaker; 4 Watts per channel, minimum RMS, at 4 ohms, from 100 Hz to 3,000 Hz, no more than 10% total harmonic distortion Tweeter; 4 Watts per channel, minimum RMS, at 4 ohms, from 3,000 Hz to 20 kHz, no more than 10% total harmonic distortion
Output power: VZ-2000X/XA	PMPO; Total 64 W (16 W x 2 + 16 W x 2, AC operation with 4 – amplifier MPO; Total 32 W (8 W x 2 + 8 W x 2, AC operation with 4 – amplifier RMS; Total 20 W (5 W x 2 + 5 W x 2, DC operation with 4-amplifier)
Supplied devices:	Bass control, treble control, balance control

Tuner Section

Circuit:	Superheterodyne FM/AM tuner, PLL stereo demodulation circuit
Frequency range:	FM: 87.6 – 108 MHz AM: 520 – 1,620 kHz
Intermediate frequency:	FM: 10.7 MHz AM: 455 kHz

Cassette Deck Section

Recording tracks:	4 track 2 channel stereo system
Recording system:	AC bias (88 kHz)
Erasing system:	AC erasing system (88 kHz) Record/playback head x 1, erase head x 1
Motor:	Electronic control DC motor
Tape speed:	4.8 cm/sec.
Fast forward time:	100 sec. (C-60 tape)
Rewind time:	100 sec. (C-60 tape)
Wow & flutter:	0.065% (WRMS)
Frequency response:	Normal tape: 30 – 14,000 Hz Chrome tape: 30 – 15,000 Hz Metal tape: 30 – 16,000 Hz
S/N:	Dolby NR off; 52 dB Dolby NR on; 62 dB (Metal tape, over 5 kHz)

Player Section

Type:	Microcomputer control, liner tracking full auto
Motor:	DC motor with FG (for platter drive) x 1, DC motor (for tonearm drive) x 1
Drive system:	Belt drive system
Speeds:	33-1/3, 45 rpm
Wow/Flutter:	0.08% (WRMS)
S/N:	66 dB (DIN-B)
Tonearm:	Dynamic balanced
Cartridge:	VM type Frequency response: 20 – 20,000 Hz Exchangeable stylus: STY-123
Supplied devices:	Auto lead-in, auto return, auto record size sensing, automatic speed selection, both sides play, repeat play

Speaker Section

Speakers:	16 cm (16-1/2") woofer x 2 5 cm (2") tweeter x 2
Frequency range:	70 – 20,000 Hz
Crossover frequency:	3,000 Hz
Impedance:	4 Ω

Specifications for this model are subject to change without prior notice.

VOLTAGE SELECTOR ADJUSTMENT

The voltage selector is located on the rear cabinet. If adjustment is necessary, use a screwdriver in order to turn the selector in either direction until the correct voltage figure is displayed in the window next to the adjustment screw.

NAMES OF PARTS

1. Cassette Holder
2. Tape Counter
3. Tape Counter Reset Button
4. Power Indicator
5. Record Indicator
6. Tape Level (Left)/Battery Indicator
7. Tape Level (Right)/Signal Indicator
8. FM Stereo Indicator
9. Meter Selector Switch
10. Loudness Switch
11. Balance Control
12. Mic. Mixing Control
13. Treble Control
14. Bass Control
15. Volume Control
16. Tuning Control
17. Cassette Eject Button
18. Record Button
19. Play Button
20. Stop Button
21. Rewind Button
22. Fast Forward Button
23. Pause Button
24. Power Switch
25. Tape Record Level Control
26. Tape Selector Switch
27. Dolby NR Switch
28. Door Open Button
29. Play/Cut Key
30. Cue Key
31. Cartridge Forward Key
32. Cartridge Reverse Key
33. Both Sides Play Key and Indicator
34. Repeat Play Key and Indicator
35. Side A/B Selector Key and Side A/B Indicators
36. Speed Selector (33/45) Key
37. Function Selector Buttons
38. Tweeter (Left)
39. Woofer (Left)
40. Tweeter (Right)
41. Woofer (Right)
42. Player Door
43. Headphones Jack
44. Microphone Jack
45. FM External Antenna Terminals
46. AM External Antenna Terminal
47. AM Antenna Ground Terminal
48. Auxiliary Input Jacks
49. Mixing Output Jacks
50. FM Rod Antenna
51. Handle
52. Beat Cancel Switch
53. Speaker Selector
54. External Speaker Socket
55. Battery Compartment
56. AC Input Socket
57. External DC Input Socket
58. AC Voltage Selector

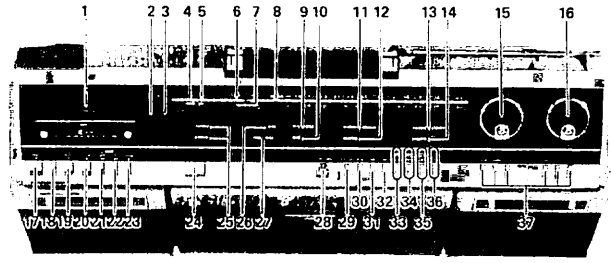

Figure 3–1

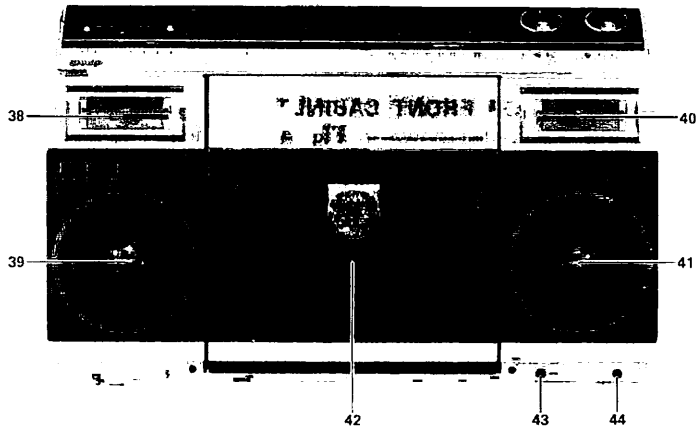

Figure 3–2

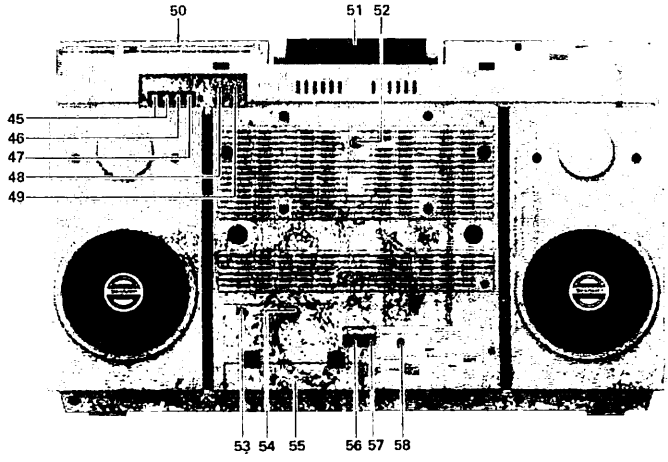

Figure 3–3

DISASSEMBLY

Cautions on Disassembly
Follow the below-mentioned notes when disassembling the unit and reassembling it, to keep its safety and excellent performance:
1. Remove the power supply plug from the wall outlet before starting to disassemble the unit.
2. Take cassette tape and record out of the unit.
3. Take off nylon bands or wire holders where they need be removed when disassembling the unit. After servicing the unit, be sure to rearrange the leads where there have been before disassembling.
4. Use sufficient care on static electricity of integrated circuits and other circuits when servicing.

[A] REMOVAL OF DUST COVER
1. Remove four screws at the dust cover, and take the cover off. See Fig. 4–1.

[B] REMOVAL OF PLAYER DOOR COVER
1. Remove the dust cover in the same way as in "[A] REMOVAL OF DUST COVER."
2. Push the door open button to open the player door.
3. Remove three screws at the player door cover, and take the cover off. See Fig. 4–2.

[C] REMOVAL OF FRONT CABINET
1. Pull out 12 knobs shown in Fig. 4–3. When it is hard to remove them, use a string or the like to help pulling out.
2. Remove four screws at the acoustic insulator, and take the acoustic insulator off. See Fig. 4–3.
3. Remove 11 screws at the front cabinet. See Figs. 4–3 and 4–4.
4. Push the cassette eject button to open the cassette holder.
5. Pull the front cabinet upwards while holding its both sides, being careful not to break the terminal board PWB-D4. Disconnect two speaker sockets (CNS401, CNS402) from the front cabinet, and take the front cabinet off. See Fig. 4–5.

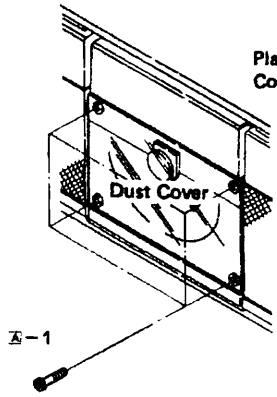

Figure 4–1

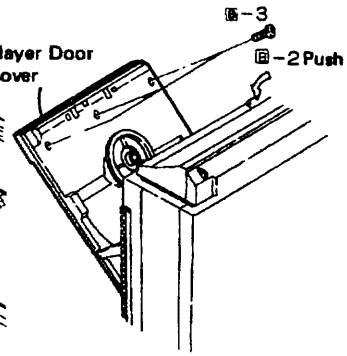

Figure 4–2

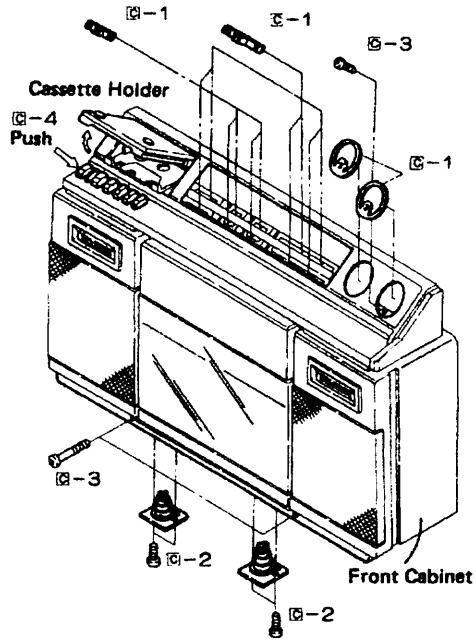

Figure 4–3

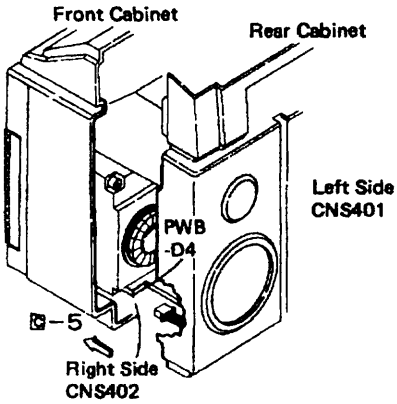

Figure 4–5

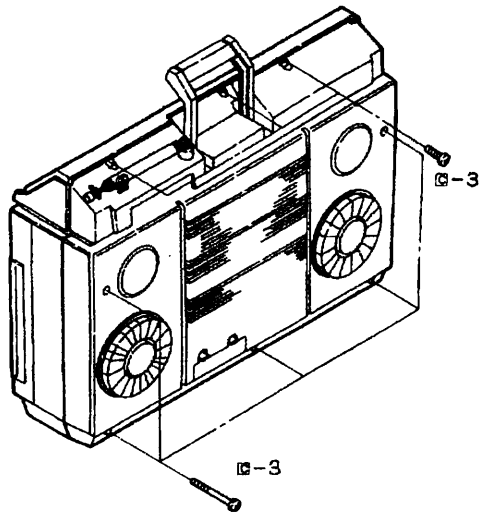

Figure 4–4

D REMOVAL OF PLAYER MECHANISM

- **With the front cabinet being removed:**

1. Remove the front cabinet in the same way as in "C REMOVAL OF FRONT CABINET."
2. Pull out two sockets (CNS501, CNS504) shown in Fig. 5–1.
3. Remove two screws at PWB-E2 shown in Fig. 5–1.
4. Push the door open button to open the player door, loosen two screws at the player mechanism and take the mechanism off. See Fig. 5–1.

- **With the front cabinet being not removed:**
  Even without the front cabinet removed, it is possible to have access to the side B tonearm and the detector switches.

5. Push the door open button to open the player door.
6. Remove two screws at the player mechanism side B cover, and take the cover off. See Fig. 5–2.
7. Remove two screws at the player mechanism. See Fig. 5–3. Shifting the player mechanism a little forwards, remove the leads from the wire holder, then the player mechanism can be taken out – at the time, take care not to break the leads of the PWB-E2 which is still attached to the unit.

E REMOVAL OF FRAME

1. Remove the front cabinet and player mechanism referring to "C REMOVAL OF FRONT CABINET" and "D REMOVAL OF PLAYER MECHANISM."
2. Remove seven screws at the frame, and take the frame off. See Fig. 5–4.

F REMOVAL OF TAPE MECHANISM

1. Remove the frame in the same way as in "E REMOVAL OF FRAME."
2. Pull out three sockets (CNS201, CNS202, CNS851) shown in Fig. 6–1.
3. Remove four screws at the tape mechanism and a counter belt – shown in Fig. 5–5 and a record/playback change-over spring – shown in Fig. 6–1. Then take the tape mechanism off.

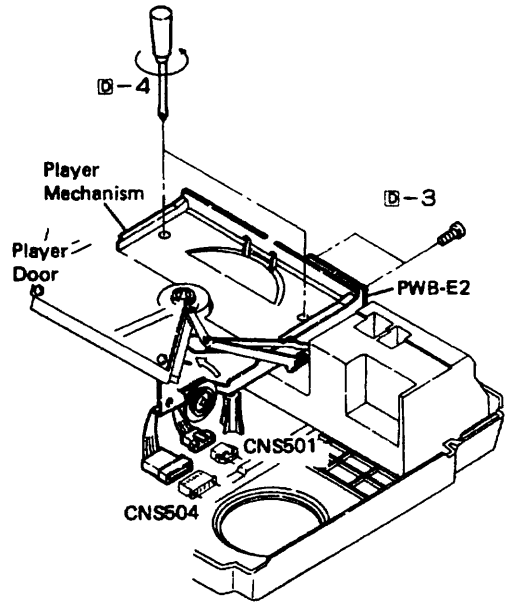

Figure 5–1

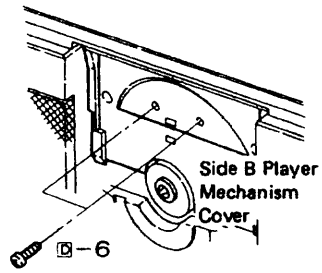

Figure 5–2

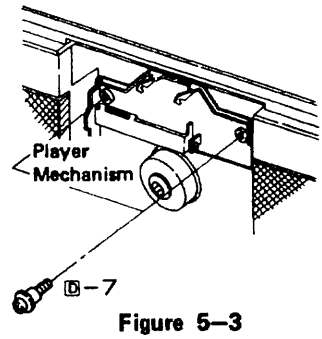

Figure 5–3

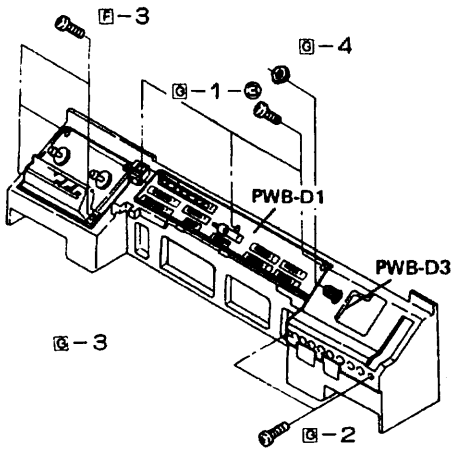

Figure 5–5

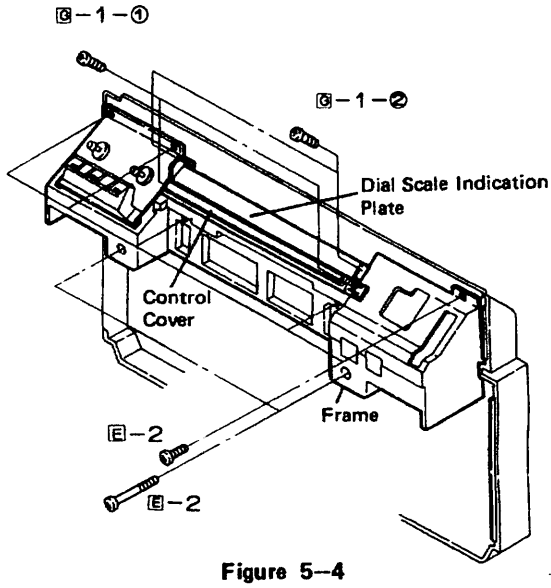

Figure 5–4

G REMOVAL OF P.W. BOARDS

*Prior to disassembling each P.W.B., remove the frame in the same way as in "E REMOVAL OF FRAME."

1. Control/Tape Deck P.W.B. (PWB-D1, PWB-D2)

① Remove two screws at the control cover and a dial illumination lamp (PL901), and take the cover off. See Fig. 5–4.

② Remove two screws at the dial scale indication plate, and take the plate off. See Fig. 5–4.

③ Detach a dial string, and remove five screws at the PWB-D2 shown in Fig. 6–1 and four screws at the PWB-D1 shown in Fig. 5–5. Take both P.W.B. off.

2. Tuner P.W.B. (PWB-B)

① Detach a dial string, remove one socket (CNS101) and two screws at the terminal indication plate shown in Fig. 6–1, and also two screws at the tuner P.W.B. shown in Fig. 5–5, and take the P.W.B. off.

3. Speaker P.W.B. (PWB-D5)

① Remove two screws at the speaker P.W.B. shown in Fig. 6–2, and take the P.W.B. off.

4. Volume P.W.B. (PWB-D3)

① Remove a nut at the volume P.W.B. shown in Fig. 5–5, and take the P.W.B. off.

5. Power Block (PWB-C1, -C2, -C3)

① Remove eight screws at the power block and a insulator cover – shown in Fig. 6–2, and take the power block off.

6. Tape Mechanism P.W.B. (PWB-A)

① Remove the tape mechanism in the same way as in "F REMOVAL OF TAPE MECHANISM."

② Remove a screw at the record/playback changeover lever, two screws at the motor bracket and a screw at the tape mechanism P.W.B. – shown in Fig. 6–3, and take the P.W.B. off.

7. Microcomputer P.W.B. (PWB-E1)

① Remove the player mechanism in the same way as in "D REMOVAL OF PLAYER MECHANISM."

② Remove a screw at the microcomputer P.W.B. shown in Fig. 6–4, and take the P.W.B. off.

H REMOVAL OF SPEAKER

1. Remove the front cabinet in the same way as in "C REMOVAL OF FRONT CABINET."

- **Tweeter**

2. Remove two screws at the tweeter shown in Fig. 6–5, and take the tweeter off.

- **Woofer**

3. Remove four screws at the woofer lid shown in Fig. 6–5, and take the lid off.
4. Remove four screws at the woofer shown in Fig. 6–6, and take the woofer off.

I REMOVAL OF SPEAKER COVER

1. Remove the front cabinet in the same way as in "C REMOVAL OF FRONT CABINET."

- **Tweeter cover**

2. Remove three screws at the tweeter cover shown in Fig. 6–6, and take the cover off.

- **Woofer cover**

3. Remove the woofer in the same way as in "H REMOVAL OF SPEAKER" – steps 3 and 4.
4. Remove a screw at the woofer cover shown in Fig. 6–6, and take the cover off.

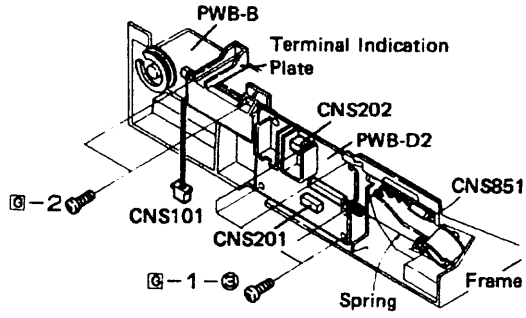

Figure 6–1

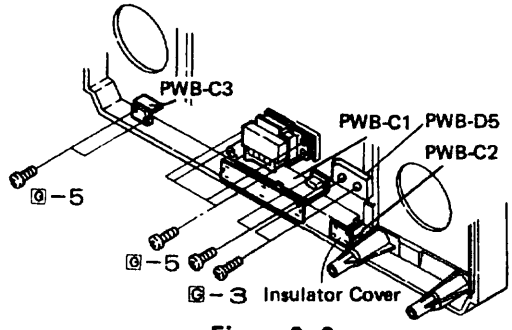

Figure 6–2

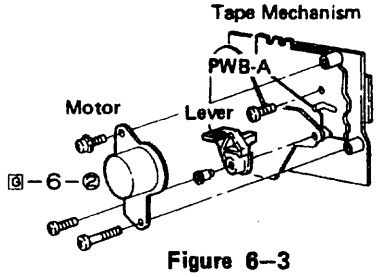

Figure 6–3

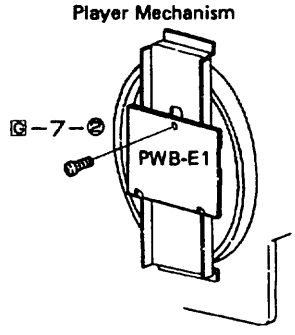

Figure 6–4

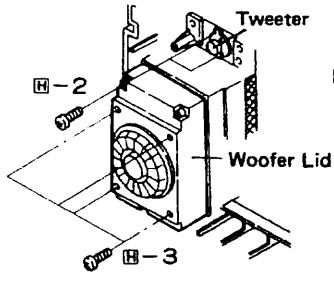

Figure 6–5

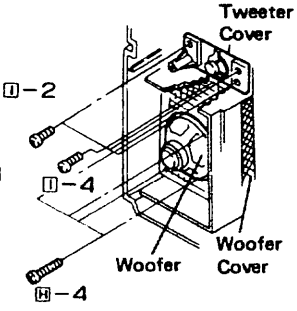

Figure 6–6

DIAL CORD STRINGING

1. Turn the drum fully counterclockwise (at the highest frequency position), and put a hook of the spring in the hole of the drum.
2. Proceed with stringing in the numerical order from ① to ⑨.
3. After the stringing, turn the dial drive shaft fully counterclockwise (at the lowest frequency position), and align the center of the pointer to zero point of the dial scale plate.

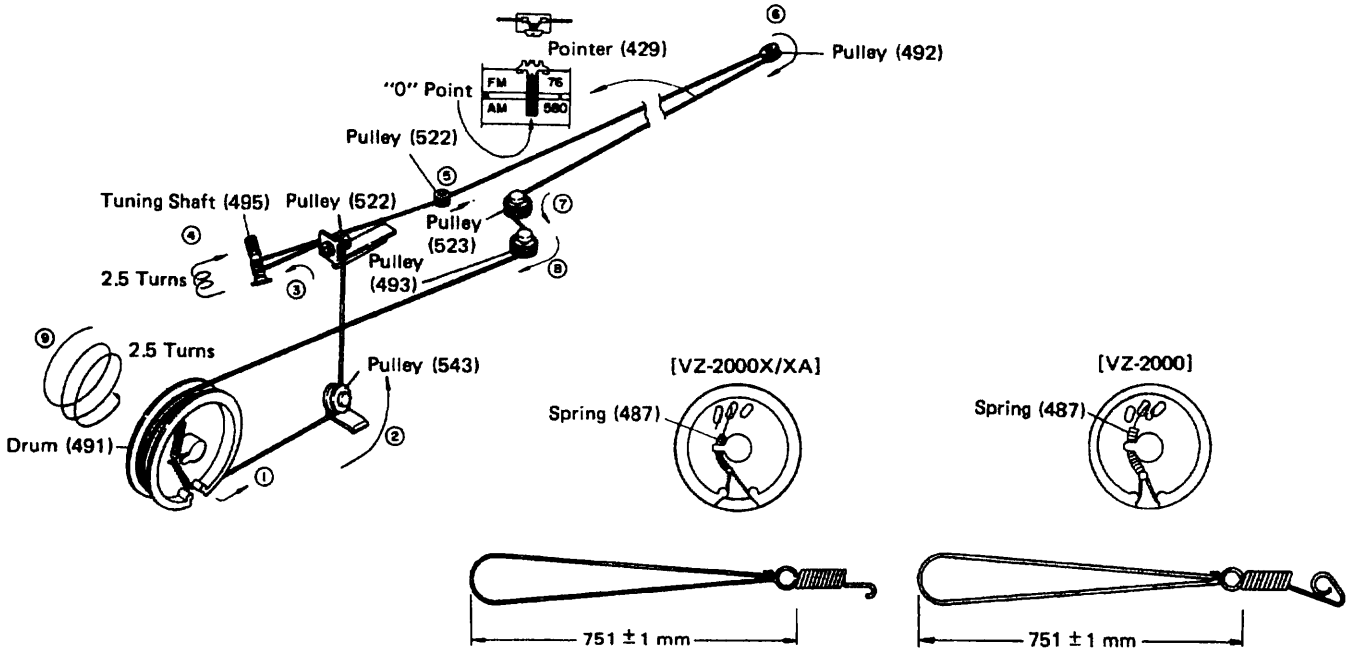

SETTING OF PLAYER WIRE

1. Set the drum at its rest position, and put a hook of the spring in the projection of the drum.
2. Stretch the wire in the numerical order from ① to ⑨.
3. After setting the wire, set the side A tonearm and side B tonearm at their lead-in positions. Refer to the instructions in "POSITIONAL ADJUSTMENT OF TONEARM LEAD-IN POSITION."

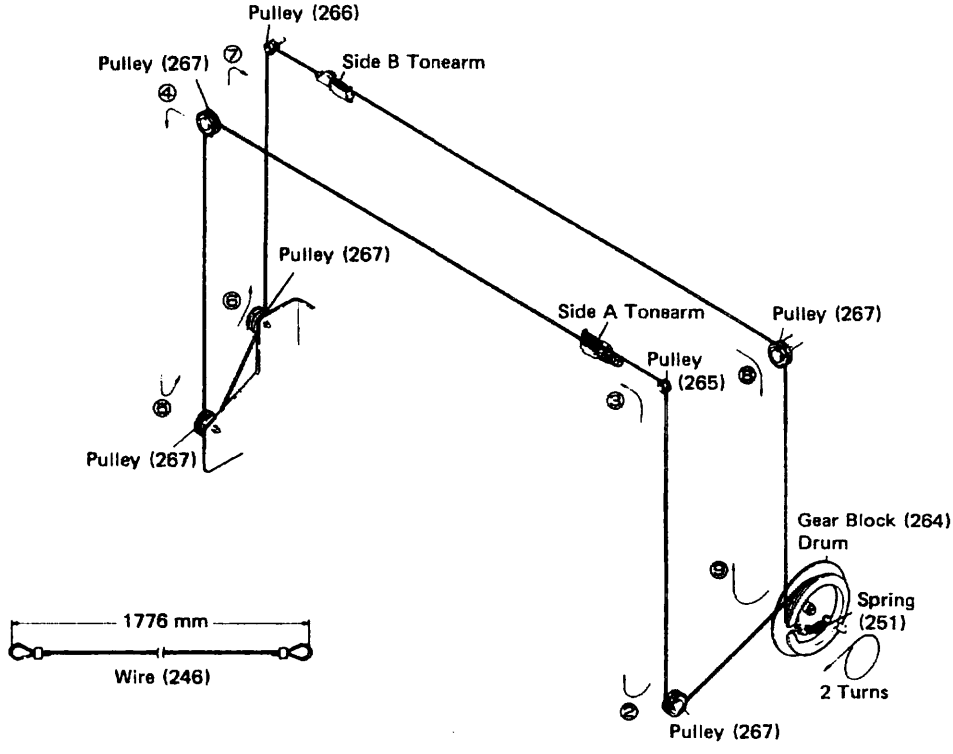

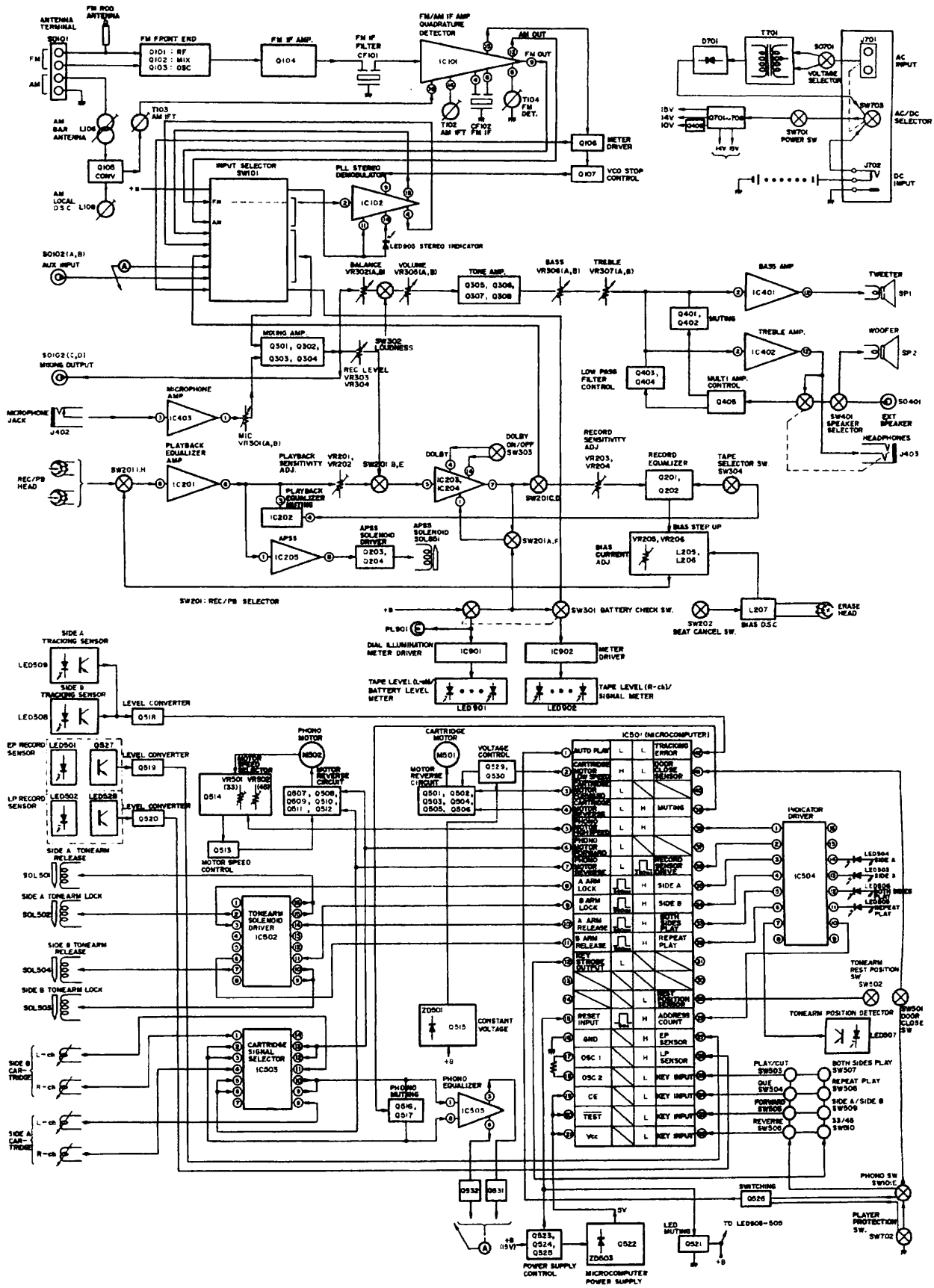

Figure 8 BLOCK DIAGRAM

CIRCUIT DESCRIPTIONS

< OUTLINE OF PLAYER CONTROL SECTION >

KEY CONTROL SECTION

This section is made up of eight keys, and each key is of the lock-out type and its chattering time is limited to 35 msec.

1. **Play/cut key**
   Enables to begin playing a record and to stop it while it is playing – this is effective when the player door is closed. When the tonearm is at its rest position (at right for side A, or at left for side B), player operation starts when this key is pushed: when the tonearm is not at its rest position, the key functions as cut key.
2. **Tonearm cue key**
   Enables cue up and cue down motion of the tonearm while a record is being played. It is used to keep or cancel cue up mode when the unit is not playing a record.
3. **Side A/side B selector key**
   Changes side A play and side B play. With this change, the tonearm moves to lead-in position, which results in playing of the back side of a record which you are listening to.
4. **Cartridge forward key**
   Enables to move the tonearm toward the optional portion on a record (to later selections). The tonearm will move until the key is released.
5. **Cartridge reverse key**
   Enables to move the tonearm back to the optional portion on a record (to previous selections). The tonearm will move until the key is released.
6. **Speed selector (33/45) key**
   Enables to manually change the speed for a record.
7. **Both sides play key**
   Enables to play side A (or side B) followed by automatic play of side B (or side A). The both sides play is cancelled by pushing the key again.
8. **Repeat play key**
   Enables to repeat play of side A or side B. The repeat play is cancelled by pushing the key again.

SENSOR SECTION

1. **Player door close sensor**
   The skelton switch detects that the player door is closed completely.
2. **Tonearm rest position sensor**
   The skelton switch detects that the tonearm is at its rest position (at right for side A, at left for side B).
3. **Tonearm position sensor**
   When the tonearm is out of its rest position, the photo interruptor produces four pulses to detect how far from the rest position the tonearm is situated.
4. **Tracking error sensor**
   The photo interruptor detects a tracking error which may be caused when a record is being played.
5. **Record sensor**
   With the player door closed, the photosensor works to detect the an EP or LP record is loaded or that neither is loaded.

INDICATOR SECTION

1. **Side A player indicator**
   Lights up when side A is instructed by the side A/side B selector key and when side A of a record is being played.

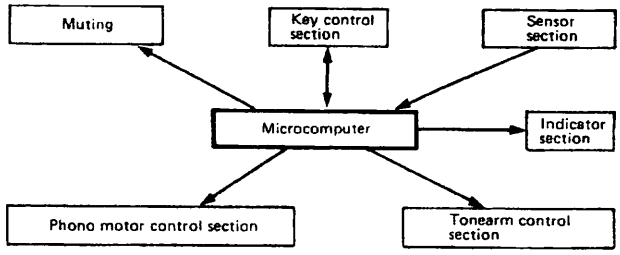

2. **Side B play indicator**
   Lights up when side B play is instructed by the side A/side B selector key and when side B play of a record is being played.
3. **Both sides play indicator**
   Lights up when both sides play is instructed by the both sides play key.
4. **Repeat play indicator**
   Lights up when repeat play is instructed by the repeat play key.

TONEARM CONTROL SECTION

Forward/reverse motion of the tonearm and also its up/down motion are controlled by the microcomputer's signals to be applied to the cartridge motor and tonearm solenoid.

- Output signal at pin ③ to be applied to the cartridge motor: the tonearm rotates forwards when the signal is at "low" level.
- Output signal at pin ④ to be applied to the cartridge motor: the tonearm rotates backwards when the signal is at "low" level.
- Output signal at pin ⑧ to be applied to the tonearm solenoid: the side A tonearm is locked when the signal is at "high" level.
- Output signal at pin ⑨ to be applied to the tonearm solenoid: the side B tonearm is locked when the signal is at "high" level.
- Output signal at pin ⑩ to be applied to the tonearm solenoid: the side A tonearm is released when the signal is at "high" level.
- Output signal at pin ⑪ to be applied to the tonearm solenoid: the side B tonearm is released when the signal is at "high" level.

PHONO MOTOR CONTROL SECTION

Side A or side B play is selected by the microcomputer's signals to be applied to the phono motor: the motor rotates forwards for side A play, and rotates backwards for side B play.

- Output signal at pin ⑤ to be applied to the phono motor: the motor rotates at high speed (45 r.p.m.) when the signal is at "low" level, and the low speed (33 r.p.m.) when it is at "high" level.
- Output signal at pin ⑥ to be applied to the phono motor: the motor rotates forwards when the signal is at "low" level.
- Output signal at pin ⑦ to be applied to the phono motor: the motor rotates backwards when the signal is at "low" level.

MUTING

Muting occurs when the output signal from pin ㊴ of the microcomputer is at "high" level.

< FUNCTIONS OF PLAYER CONTROL SECTION >

WITH POWER ON

The microcomputer starts operating when the power switch is turned on, and the VZ-2000 is first set as follows:

1. The tonearm returns to its rest position if it has been at the other position.
2. Only the side A of a record is ready to be played when the player door has been opened.
3. When the player door has been closed, the microcomputer detects whether there is a record in the compartment or not. If it is loaded, the side A is ready to be played: in the case of EP record, the speed is set at 45 r.p.m. and in the case of LP record, it is set at 33 r.p.m.
   If a record is not loaded, this operation does not occur.

DOOR OPEN OPERATION

With the player door opened, the door close detector switch turns off to keep the unit muted for about 60 msec, and thereafter the phono motor stops. At the same time the side A of a record is ready to be played and the tonearm returns to its rest position. Also the both sides play mode or the repeat play mode is cancelled if it has been instructed beforehand.

DOOR CLOSE OPERATION

1. When the tonearm is out of its rest position, it returns to the rest position as the player door is closed.
2. When the player door is closed without a record loaded, the record sensor detects this unloading and the microcomputer's presettings are all cancelled. Thereafter any key is ineffective if pushed.
3. When the player door is closed with a record loaded, the record sensor detects whether the record is EP one or LP one, and playing starts: in the case of EP record, the speed is set at 45 r.p.m. and in the case of LP record, the speed is set at 33 r.p.m.

PLAY START OPERATION

When the tonearm is at the rest position and a record has been loaded and the player door closed, playing the record starts when the play/cut key is pushed. When playing starts, the tonearm moves at high speed toward its lead-in position according to the microcomputer's signals to decide the rotational direction and speed of the phono motor. At the lead-in position, the tonearm follows the preset instruction of cue up or cue down operation: with the cue down instruction, it moves down to the record, and with the cue up instruction, it stays at the lead-in position.

TONEARM UP/DOWN MOTION

The tonearm moves up and down through a control of two solenoids.

1. The microcomputer feeds the tonearm lock solenoid with a current for about 500 msec, during which the tonearm guide operation lever is locked against its locking lever, so that the tonearm can move down.
2. The microcomputer feeds the tonearm release solenoid with a current for about 500 msec, during which the tonearm guide operation lever is unlocked from its locking lever, so that the tonearm can move up. While the tonearm is moving up or down, a muting is caused to prevent the shock noise.

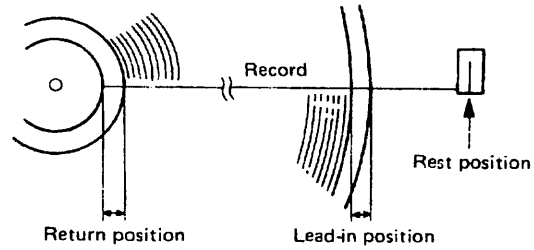

Figure 10–1

TONEARM FORWARD OPERATION

- **When the player door is opened:**
  When the cartridge forward key is pushed, the tonearm advances at high speed toward the EP record lead-in position; at the time, the phono motor is kept in a stop. To return the tonearm to the rest position, push the cartridge reverse key.
  As a result of this operation and with the player door being opened, it is for you accessible to the stylus tip at the time of replacing it.
- **When the player door is closed (provided that a record is loaded in the unit):**

1. When the tonearm is at the rest position, pushing the cartridge forward key makes the tonearm move at high speed toward the lead-in position: at the time, the microcomputer decides the rotational direction and speed of the phono motor according to the type of a record to be loaded in the unit. Then at this position, the tonearm performs cue up or down operation according to the setting of the cue key.
2. When the unit in play mode, if the cartridge forward key is pushed, the tonearm forward speed slows down and it continues to move inwards until the key is released. Then at this position, the tonearm performs cue up or down operation according to the setting of the cue key.
3. If the tonearm reaches its return position with a continuous push of the cartridge forward key, it automatically starts returning toward the rest position at high speed.

CARTRIDGE BACKWARD OPERATION

The tonearm moves backwards when the cartridge reverse key is pushed, provided that the player door has been closed and a record loaded.

1. When the tonearm is placed between the rest position and lead-in position, play operation is cut when the cartridge reverse key is pushed. The tonearm will return to the rest position and the phono motor will stop.
2. When the tonearm is any place between the lead-in position and return position, the tonearm moves backwards at low speed when the cartridge reverse key is pushed. Then the tonearm stops when the key is released and it keeps cue up operation. If the key continues to be pushed until the tonearm exceeds the lead-in position, the tonearm stops once, and it moves back to the lead-in position, and keeps cue up operation.
3. While the unit is playing, pushing the cartridge reverse key makes the tonearm move up and then backwards at low speed. And when the key is released, the tonearm stops and performs cue down operation making the unit ready for playing. If the key continues to be pushed until the tonearm exceeds the lead-in position, the tonearm once steps, and it moves back to the lead-in position and performs cue down operation, making the unit ready for playing.

CUE UP/CUE DOWN OPERATION

Record play stops temporarily when the cue key is pushed, and it resumes from that position when the key is again pushed. Temporary stop of record play is called cue up operation while its restarting is called cue down operation.
Cue up operation changes to cue down operation and vice versa each time the cue key is pushed.

- **Cue down operation**

1. Cue up state is cancelled and the side A or side B play indicator goes off.
2. Cue down operation lasts 1 second, and 2 seconds later the muting is cancelled.

- **Cue up operation**

1. Cue up operation starts, and the side A or side B play indicator blinks (with approx 3 Hz signal).
2. Cue up operation lasts 1 second.
   Muting occurs for 60 msec before cue up operation has started.

SIDE A/SIDE B SELECTION

Side A play or side B play is selected by pushing the side A/side B selector key, provided that the player door has been closed, a record loaded and the tonearm placed anywhere other than at the rest position.

- **During cue up operation**
  When the side A/side B selector key is pushed, lighting of the side A play indicator changes to that of the side B play indicator or vice versa, the tonearm returns at high speed to the lead-in positon and the phono motor changes its direction.
  This motor's rotational change takes about 1 second, and the motor takes another 1 second to be set at its normal speed.
- **While the record is playing**
  When the side A/B selector key is pushed, lighting of the side A indicator changes to that of the side B indicator or vice versa, the tonearm moves up and returns to the rest position, and the phono motor changes its direction: at the time, the play indicator blinks (with approx. 1.5 Hz signal). Then the back side of the record you are listening to will begin playing from the beginning.
  Also in this case, the phono motor takes about 2 seconds from the time it starts changing its direction until it is set at the normal speed.

AUTO RETURN FUNCTION

During play mode and cartridge forward mode, when the tonearm moves on and exceeds the return position, it returns automatically to the rest position or the lead-in position. For play mode, the return operation occurs after the tonearm is once lifted off the record surface.

1. When the return operation occurs with a push of the cartridge forward key, cue up operation once preset is cancelled.
2. The return operation is performed in three different ways according to the setting modes.
   - If only the repeat play key has been pushed, the return operation occurs in such as way as to make the same side of the record played repeatedly.
   - If only the both sides play key has been pushed, the return operation occurs in such a way as to make both sides of the record played; each side being played one time respectively.
   - If the both sides play key and repeat play key have been pushed, the return operation occurs in such a way as to make both sides of the record played repeatedly.
3. For one side repeat play, when side A (or B) is finished, the tonearm returns to the rest position and the same side begins playing from the beginning. For both sides play or both sides repeat play, when side A (or B) is finished, the tonearm returns to the rest position and the side B (or A), or the back side of the record you are listening to, begins playing from the beginning: if the cue key has been pushed, the tonearm performs cue up operation before playing the back side has started.
4. Unless either the both sides play key or the repeat play key has been pushed, playing the record is cut after the return operation.
5. During the return operation in one side repeat play, the play indicator blinks (with approx. 1.5 Hz signal) to show that the same side as you are listening to will begin playing again from the beginning: during the return operation in both sides play, the play indicator blinks (with approx. 1.5 Hz signal) to show that the back side of the record you are listening to will begin playing.
6. For one side repeat play, play is repeated six times for the same side of the record, and after the sixth play the tonearm returns to the rest position and play operation is cut. For both sides repeat play, play is repeated three times for each of the sides A and B, and after the sixth play in whole the tonearm returns to the rest position and play operation is cut.

STOP FUNCTION

1. While the tonearm is away from its rest position, when the play/cut is pushed, the tonearm returns to the rest position with the phono motor stopping.
2. During play, pushing the play/cut key causes the tonearm to move up and return to the rest position and stops the phono motor.
3. All the indicators other than side A or side B indicator go off while the play cut operation is performed.

SIGNAL FROM SENSORS TO MICROCOMPUTER

1. **Player door close detection**
   Closing the player door causes SW501 to turn on, and its output signal (at "low" level) is applied to pin (41) of the microcomputer.
2. **Detection of tonearm rest position**
   SW502 is the sensor which detects that the tonearm is at the rest position. The output (at "low" level) from this sensor is applied to pin (29) of the microcomputer.
3. **Detection of tonearm position**
   Detection of where the tonearm is placed at is performed by LED507 and a gear drum. The detected pulse is applied to pin (28) of the microcomputer.
4. **Detection of tracking error angle**
   The tracking error angle is detected by LED509 (for side A) and LED508 (for side B). The detected signal is applied to pin (42) of the microcomputer.
5. **Detection of EP/LP record loading or no loading**
   LED501 and LED502 sense whether an EP or LP record is loaded or not loaded, and their outputs are applied via Q527 and Q528 to pin (26) (for LP record) and pin (27) for EP record) of the microcomputer.

Mode \ Key	Play/cut	Cue up/cue down (▼ ▼)	Forward (◀◀)	Reverse (▶▶)	Both sides play	Repeat play	Side A/ side B	33/45
Tonearm forwarding (with door opened)	X	Δ	X	O	Δ	Δ	Δ	X
Tonearm at rest position (with door opened)	X	Δ	O	X	Δ	Δ	Δ	X
Tonearm returning with door closed (with record loaded)	X	Δ	X	X	Δ	Δ	Δ	Δ
Tonearm returning with power switch ON (with door closed)	X	Δ	X	X	Δ	Δ	Δ	Δ
Tonearm at rest position (with door closed and record loaded)	O	Δ	O	X	Δ	Δ	Δ	Δ
Tonearm moving from rest position to lead-in position (with door closed and record loaded)	O	Δ	X	O	Δ	Δ	Δ	O
Cuing up (with door closed record loaded)	O	O	O	O	Δ	Δ	O	O
Tonearm moving down (with door closed and record loaded)	O	O	O	O	Δ	Δ	O	O
Tonearm touching the record surface (with door closed and record loaded)	O	O	O	O	Δ	Δ	O	O
Tonearm moving up (with door closed and record loaded)	O	X	O	O	Δ	Δ	O	O
During side A/B selection (with door closed and record loaded)	O	X	X	X	Δ	Δ	O	O
During return (with door closed and record loaded)	O	X	X	X	Δ	Δ	O	O

Table 12–1

Note:
Mark O; With each key pushed, the corresponding mode is obtained.
Mark Δ; With each key pushed, the corresponding mode is obtained but with other mode accompanied.
Mark X; Ineffective

< CIRCUITS AROUND THE MICROCOMPUTER >

POWER CONTROL CIRCUIT

The power control circuit consists of Q522, Q523, Q524 and Q525, and it supplies 5 V to the microcomputer to keep it alive. And also it causes a reset signal when the power switch is turned on or off or when the battery capacity is reduced, so that the microcomputer is reset.

1. **With the power switch turned on:**
   When the power switch is activated, the power supply circuit causes 15 V to be supplied to L502 and R579. Out of this 15 V, a part of 5 V is applied via Q522 and ZD503 to the microcomputer.
   The reset signal is also caused simultaneously with such 5 V and supplied via R581 to the microcomputer, so that the microcomputer is reset for 5 msec the time constant of which is decided by C531 and R579: then Q525 turns on to stop the resetting of the microcomputer. While the reset signal is alive for 5 msec, all the output pins of the microcomputer are at "high" level.
2. **With the power switch turned off:**
   When the power switch is released, 15 V which is once caused by the power circuit is lowered to 7 V so that Q525 turns off to apply the reset signal to the microcomputer.
   Since all the output pins of the microcomputer are at "high" level, the reset signal caused during play mode initiates the tonearm release solenoid to make the tonearm move up. Refer to the "Tonearm Solenoid Drive Circuit" described later.
3. **With battery capacity reduced:**
   As the battery capacity is reduced, the power supply of 5 V to the microcomputer fluctuates so that the microcomputer shows an erroneous operation. To avoid this, when the power supply voltage (15 V) drops down to 7 V, Q525 turns off and the reset signal is applied to the microcomputer to reset it: the resetting continues for about 650 msec the time constant of which is decided by C530 and R583. Then Q523 and Q524 turn on, and Q522 turns off so that the power supply of 5 V to the microcomputer is discontinued.

• Signal: With the power switch turned on

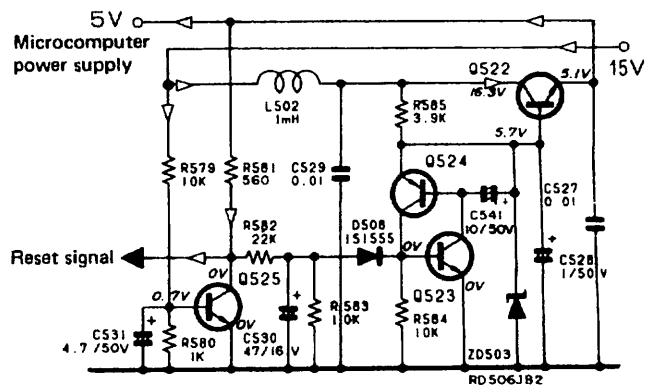

Figure 12–1 Power control circuit

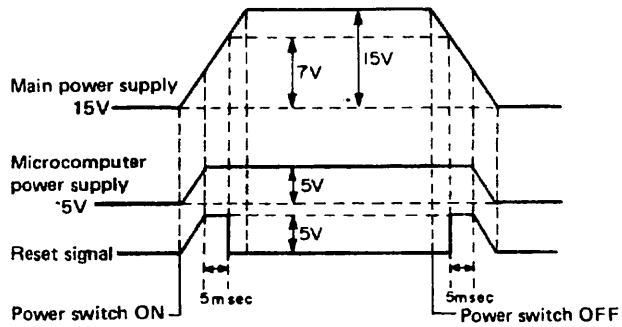

Figure 12–2 Timing chart of power control circuit

CARTRIDGE MOTOR NORMAL/REVERSE ROTATION SELECTOR CIRCUIT AND SPEED SELECTOR CIRCUIT

This circuit is made up of Q501 to Q506, Q529 and Q530, and changes polarity and voltage of the power supply to be applied to the cartridge motor.

1. **To make the motor rotate in normal direction (with tonearm forward operation):**
   In this case, the output from pin ③ of the microcomputer becomes "low" level to turn off Q506 and Q504. With Q506 and Q504 turned off, Q502 turns on so that pin ② of the motor is positive; at the same time, pin ④ of the microcomputer becomes "high" level to turn on Q505 and Q503. As a result, Q501 turns off so that pin ① of the motor is negative, thus allowing the motor to revolve in normal direction.
2. **To make the motor rotate in reverse direction (with tonearm backward operation):**
   In this case, the output from pin ④ of the microcomputer becomes "low" level to turn off Q505 and Q503. With Q505 and Q503 turned off, Q501 turns on so that pin ① of the motor is positive: at the same time, pin ③ of the microcomputer becomes "high" level to turn on Q506 and Q504. As a result, Q502 turns off so that pin ② of the motor is negative, thus allowing the motor to revolve in reverse direction.
3. **High speed/low speed selection**
   High speed/low speed selection of the motor is performed with a control of the microcomputer to change the supply voltage to be applied to the cartridge motor.
   In the case of high speed mode, the output from pin ② of the microcomputer becomes "low" level to turn off Q529. With Q529 turned off, Q530 turns on so that a voltage of about 8.5V is applied to the cartridge motor normal/reverse rotation selector circuit.
   In the case of low speed mode, the output from pin ② of the microcomputer becomes "high" level to turn on Q529. With Q529 turned on, Q530 turns off so that a voltage of about 6.5V is applied via R624 to the cartridge motor normal/reverse rotation selector circuit.
   After that, there is caused a pulse at pin ③ for the motor normal rotation or a pulse at pin ④ for the motor reverse rotation as shown in Fig. 13–2, so that a power voltage of about 6.5V is applied to the cartridge motor.
   The output from pins ③ and ④ of the microcomputer are processed to be 50% of their original duty and used to stabilize the low speed rotation of the cartridge motor – see Fig. 13–2.

TONEARM SOLENOID DRIVE CIRCUIT

This circuit is made of IC502 and drives the side A and side B tonearm solenoids shown below. With the power switch turned off, the charged voltage of C502 is used to drive each solenoid. Table 13–1 shows how the microcomputer controls the action of the tonearm solenoids.

Cartridge motor rotation

Pin No.	Normal rotation (Tonearm forward)	Reverse rotation (Tonearm reverse)
①	–	+
②	+	–

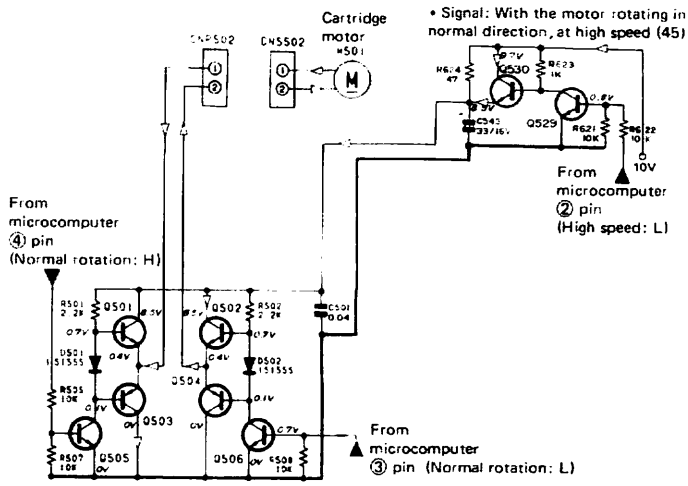

Figure 13–1 Cartridge motor normal/reverse rotation selector circuit and speed selector circuit

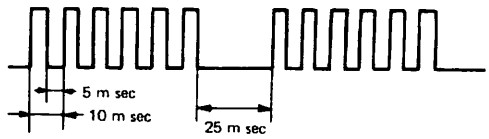

Figure 13–2 Output for low speed motion

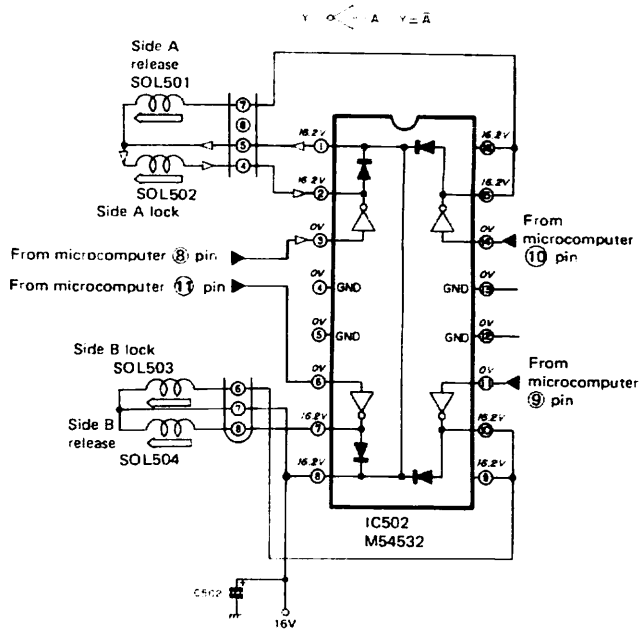

Figure 13–3 Tonearm solenoid drive circuit

Tonearm solenoid		Microcomputer IC501 Pin No.	Microcomputer IC501 Output signal	Tonearm solenoid driving Pin No.	Tonearm solenoid driving Output signal	Tonearm operation
Side A	Tonearm lock	⑧	500msec 5V 0V	②	16V 0V 500msec	Down
	Tonearm release	⑩		⑮		Up
Side B	Tonearm lock	⑨		⑩		Down
	Tonearm release	⑪		⑦		Up

Table 13–1 Tonearm Solenoid Driving

TRACKING ERROR DETECTOR/CARTRIDGE FORWARD CIRCUIT

This circuit is composed of photo interrupter LED509 for side A (or LED508 for side B) and Q518, and detects the tracking error to control the cartridge forward operation when a record is playing.

At the start of playing the side A of a record, the tonearm is kept slantwise the angle of which is detected by the photo interrupter LED509 (now there is a light emission to the LED509), and the resultant signal ("high" level) is applied to the base of Q518 so that this transistor turns on. With Q518 turned on, the "low" level signal is applied to pin 42 of the microcomputer. Then the signal goes out of pin 3 of the microcomputer, which is a pulse shown in Fig. 14–2, and drives the cartridge motor, thus causing the tonearm to move forwards. As the tonearm further moves forwards, it keeps itself horizontal so that its slanting angle is no more detected by the LED509 (now there is no light emission to the LED509). Then the output of LED509 becomes "low" level to turn off Q518, so that pin 42 of the microcomputer becomes "high" level to stop rotation of the cartridge motor. If by accident the angle of the cartridge becomes slanted, the microcomputer program is that the cartridge be kept in a stop not moving forwards. This is because pin 43 of the microcomputer can accept the cartridge angle's information only when the muting circuit is opend.

In the case of playing the side A of a record, the "low" level signal from pin 6 of the microcomputer is fed to Q512, and this transistor turns off to cut off a light emission to the LED508; as a result, it is then that no tracking error detection happens for the side B of the record. In the case of playing the side B, the "low" level signal from pin 7 of the microcomputer turns off Q511 to prevent the tracking error detection at side A.

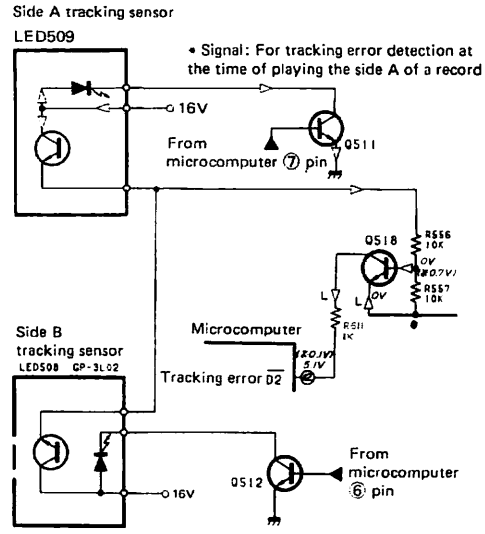

Figure 14–1 Tracking error detection circuit

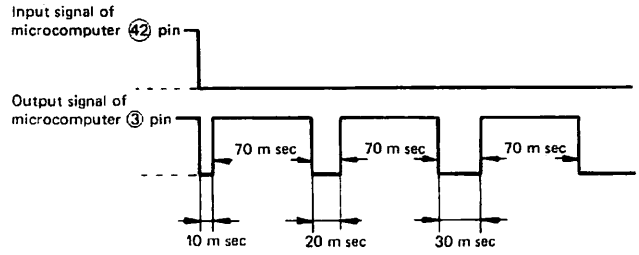

Figure 14–2 Tracking error input and corrected output

PHOTO SENSOR LEVEL CONVERTER CIRCUIT

This circuit is made up of Q519, Q520 and IC504, and the signal from each sensor is here so processed that it is shaped in waveform and changed in level to be applied to the microcomputer.

1. Tonearm position detection

When an EP or LP record is at the lead-in position or return position, LED507 and gear drum work together to detect this, and the resultant signal is applied to pin 7 of IC504, so that there appears at pin 10 of IC504 which is at "high" level (at 5V) arriving at pin 28 of the microcomputer.

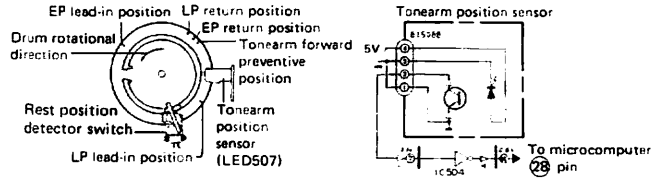

Figure 14–3 Figure 14–4

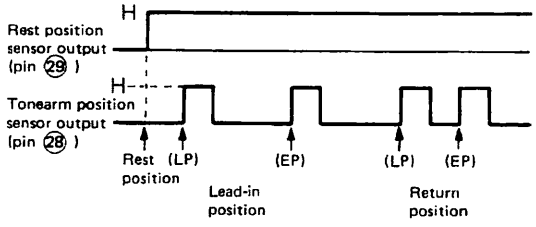

Figure 14–5 Tonearm position sensor output pulse

2. Record detection

- If an EP record is loaded, the sensor stops its light emission to Q527 while sends it to Q528, and so Q519 turns off and Q520 turns on. Therefore, the input signals to pin 26 and 27 of the microcomputer are at "low" level and "high" level respectively, so that the microcomputer can tell that an EP record has been loaded.

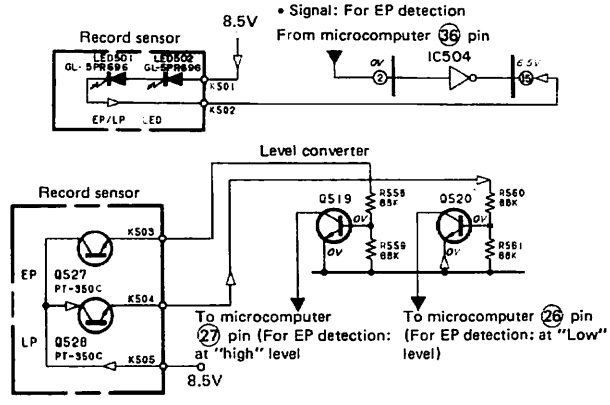

Figure 14–6 Record detection circuit

Record loading	EP sensor input (pin 27)	LP sensor input (pin 26)
EP record loaded	H	L
LP record loaded	H	H
No record loaded	L	L

Table 14–1 Record Detection Input

- If an LP record is loaded, the sensor stops its light emission to Q527 and Q528, and so Q519 and Q520 turn off. With Q519 and Q520 turned off, the input signals to pin 26 and pin 27 of the microcomputer are both at "low" level, so that the microcomputer can tell that an LP record has been loaded.
- When no record is loaded, the sensor sends its light emission to Q527 and Q528, and so Q519 and Q520 turn on. With Q519 and Q520 turned on, the input signals to pin 26 and 27 of the microcomputer are both at "low" level, so that the microcomputer can tell that no record has been loaded.

* The record detection sensors LED501 and LED502 are designed to cause light emission for 200 msec after the player door is closed or the power switch is turned on.

INDICATOR DRIVE CIRCUIT

This circuit is made up of inverter IC504.

When any of the side A/side B selector, both sides play key and repeat play key is pushed, the output from the microcomputer becomes "high" level to be fed to the inverter IC504. Here it is inverted to be "low" level signal to light up the indicator corresponding to one of these keys which has been pushed.

When the power switch is turned on or off, the reset signal from Q521 is applied to the microcomputer, and at the time, each indicator is muted to be kept off.

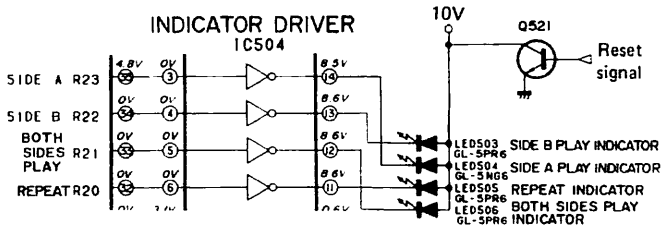

Figure 15–1 Indicator drive circuit

MUTING CIRCUIT

This circuit is made up of Q516 and Q517. When the output from pin 39 of the microcomputer is at "high" level, Q516 and Q517 turn on to cut off the signal which is applied to the side A and side B phono equalizers. This muting happens unless the unit is playing.

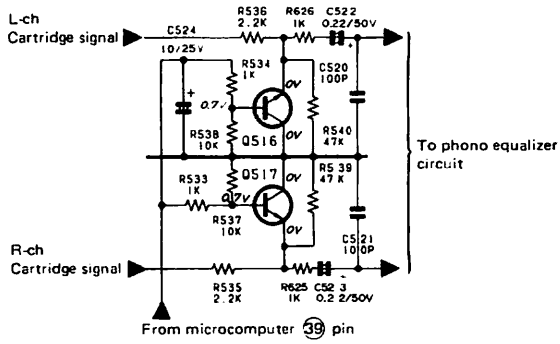

Figure 15–2 Muting circuit

AUTOMATIC PLAY CONTROL CIRCUIT

This circuit is composed of Q526, input selector switch SW101, protector switch SW702 and door close detector switch SW501.

1. When the input selector switch is set at "player" position and the protector switch is set at "off" position, a power of 5V is applied to the base of Q526 so that this transistor tuns on and the resultant "low" level signal is fed to pin 1 of microcomputer. And when the player door is closed, SW501 turns on to apply "low" level signal to pin 41 of the microcomputer. With both pins 1 and 41 fed with "low" level signal, the unit starts to perform record playing automatically: if otherwise, this automatic play does never occur.
2. When the unit is in play mode, if the input selector switch SW101 is changed from "player" poistion to any other position, the earth line of the door close detector switch SW501 is cut off through the switch SW101, so that the input signal to pin 41 of the microcomputer becomes "high" level and the microcomputer causes the tonearm to move up and return it to the rest position.
   If under this the input selector switch is returned to "player" position, the unit doesn't perform the automatic play because pin 41 of the microcomputer is at "high" level now: in order to start the automatic play, pins 1 and 41 of the microcomputer must be at "low" level at a time.
   And now the door close detector switch is turned on with the input selector switch returned to "player" position. Under this state, the voltage to be applied to the base of Q526 is controlled by C532 and R586 the time constant of which is set at 30 msec. Therefore with a time delay of 30 msec, the "low" level signal is applied to pin 1 of the microcomputer and this delay prevents the unit to perform the automatic play by error.
3. When the unit is in play mode, if the protector switch is turned on or off, the unit behaves in the same way as in item 2 above.

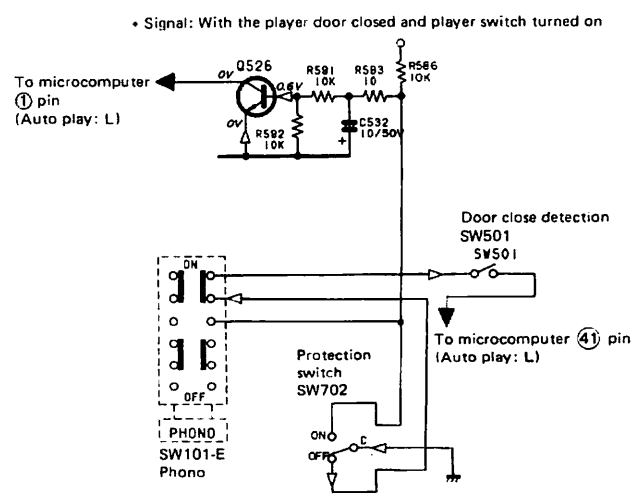

Figure 15–3 Auto play control circuit

PHONO MOTOR CONTROL CIRCUIT

This circuit consists of Q507 to Q517 and controls a proper rotation of the phono motor.

1. Speed (33/45 r.p.m.) selection

When the speed is set at 33 r.p.m., the output from pin ⑤ of the microcomputer becomes "high" level to turn on Q514, thus the phono motor revolving at the speed of 33 r.p.m. When the speed is set at 45 r.p.m., the output from pin ⑤ of the microcomputer becomes "low" level to turn off Q514, thus the phono motor revolving at the speed of 45 r.p.m.

The speed is adjustable with VR501 (for 33 r.p.m.) and VR502 (for 45 r.p.m.).

2. Normal/reverse rotation selection

- Normal rotation:
  When the side A is playing, the output from pin ⑥ of the microcomputer is at "low" level to turn off Q512 and turn on Q510 and Q507, and the output from pin ⑦ of the microcomputer is at "high" level to turn on Q511 and turn off Q509 and Q508. And a power of 5V is applied via R503 to Q513 to turn it on. Then pin ② and pin ① of the phono motor are positive and negative respectively, so that the phono motor revolves in normal direction.
- Reverse rotation:
  When the side B is playing, the output from pin ⑦ of the microcomputer is at "low" level to turn off Q511 and turn on Q509 and Q508, and the output from pin ⑥ of the microcomputer is at "high" level to turn on Q512 and turn off Q510 and Q507. Then pin ① and pin ② of the phono motor are positive and negative respectively, so that the phono motor revolves in reverse direction.

3. Speeed Control

Speed change of the phono motor between 33 r.p.m. and 45 r.p.m. is in accordance with a change of the voltage to be applied to it.

For instance, when the speed selector is changed from 33 r.p.m. to 45 r.p.m. position, the output from pin ⑤ of the microcomputer becomes "low" level to turn off Q514. With Q514 turned off, the voltage from pin ③ of the voltage generator in the phono motor is reduced through R518, VR502, VR501, and R517 to be applied to pin ⑥ of the phono motor. As the result of this voltage reduction of the base potential of R1 increases and the base potential of Q513 decrease respectively, compared with those as when they were at the speed of 33 r.p.m. Therefore the collector-to-emitter resistance of Q513 is also reduced to lower the negative potential of the phono motor (to increase the supply voltage to it), so that the phono motor speed is set at 45 r.p.m.

There may be a variation of the motor rotational speed, and this is corrected in the same way as above mentioned by increasing or decreasing the voltage to be applied to Q513. Thus this Q513 controls a proper voltage to apply it to the phono motor, with its speed being kept steady. With the variation of the motor speed, the voltage from pin ③ of the voltage generator in the phono motor is higher or lower than specified, resulting in that the base potential of Q1 is changed to increase or decrease voltage at the base of Q513. That is, if the motor speed is higher than specified, voltage at the base of Q513 decreases to lower supply voltage to the phono motor, so that the motor speed slows down to the specified one. If the speed is lower than specified, voltage at the base of Q513 increases to raise supply voltage to the phono motor, so that the motor speed grows up to the specified one.

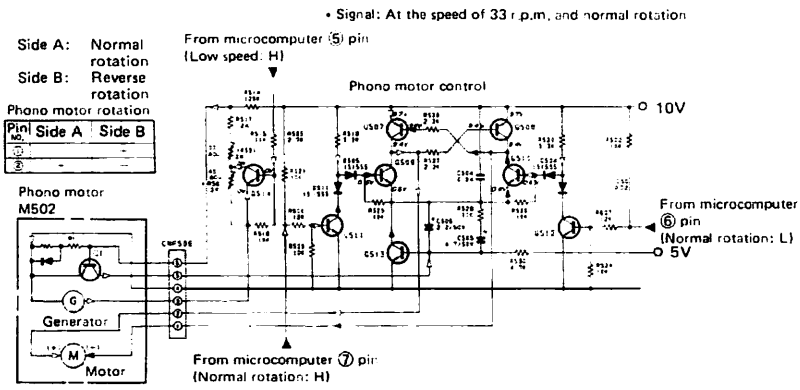

Figure 16–1 Phono motor control circuit

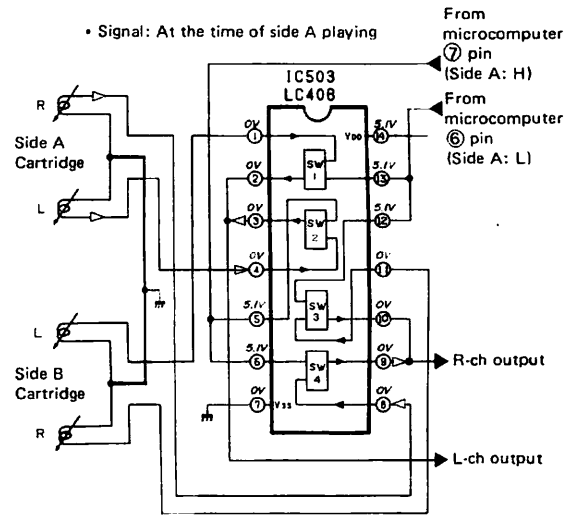

Figure 16–2 Side A/Side B cartridge signal selector circuit

SIDE A/SIDE B CARTRIDGE SIGNAL SELECTOR CIRCUIT

This circuit is made up of IC503, and selects the side A or side B phono equalizer circuit.

When the unit is set in side A play mode, the output from prn ⑥ of the microcomputer is at "low" level and the output from pin ⑦ of the microcomputer is at "high" level; and the former is applied to pin ⑫ (SW1) and pin ⑬ (SW3) of IC503 and the latter to pin ⑤ (SW2) and pin ⑥ (SW4) of IC503. As a result, SW2 and SW4 of IC503 turn on to feed the side A cartridge output to the phono equalizer circuit: at the time, SW1 and SW3 of IC503 are turned off to cut off the side B cartridge output. When the unit is set at side B play mode, the output from pin ⑥ of the microcomputer becomes "high" level and the output from pin ⑦ of the microcomputer becomes "low" level, so that SW1 and SW3 turns on, and SW2 and SW4 turns off, thus allowing the side B cartridge output to be applied to the phono equalizer circuit.

< MULTI-AMPLIFIER CIRCUIT >

This circuit is made up of IC401, IC402, Q401, Q403 and Q405: IC401 is a tweeter amplifier and IC402 is a woofer amplifier. Both IC401 and IC402 receives the signals from the tone control circuit; the input signal to the former has passed through the high-pass filter which consists of C435, R441, C401 and R405, and the input signal to the latter has passed through the low-pass filter which consists of R413 and C417.

When the external speaker is operated instead of the built-in speakers, the switches ⑤ and ⑥ at the input jack J403 get in contact with each other to apply "low" level signal to the base of Q450 to turn if off. With Q405 turned off, its collector voltage is fed via R426 to the base of Q402 to turn it on. With Q402 turned on, the input signal to the tweeter amplifier IC401 it cut off, none of its output entering the tweeter. With the switches ⑤ and ⑥ in contact, "low" level signal is also applied to the base of Q403 so that the low-pass filter is inactive to allow the whole range of signal to be applied to the woofer amplifier IC402. In other words, it is with the external speaker in operation that the IC402 works as a whole-range amplifier with the IC401 being cut off. The same occurs when the headphones is connected to the unit.

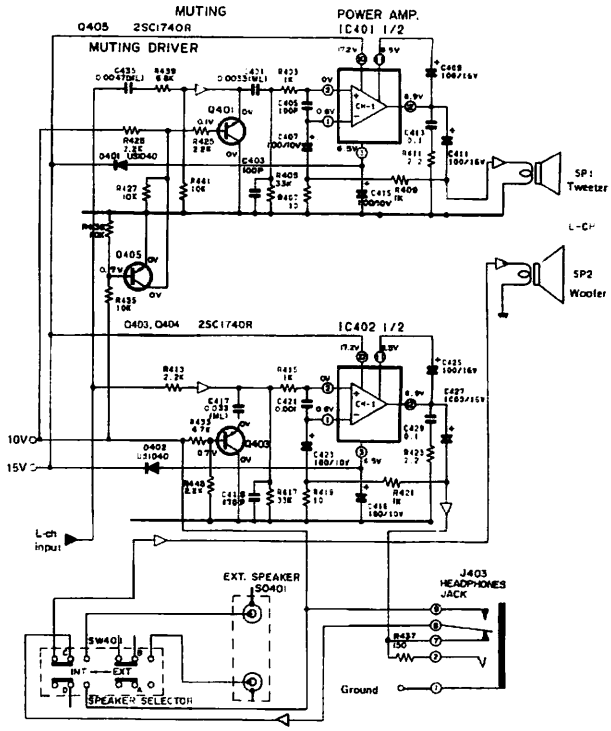

Figure 17—1 Multi amplifier circuit

OPERATION OF MICROCOMPUTER AND ITS PERIPHERAL CIRCUITS

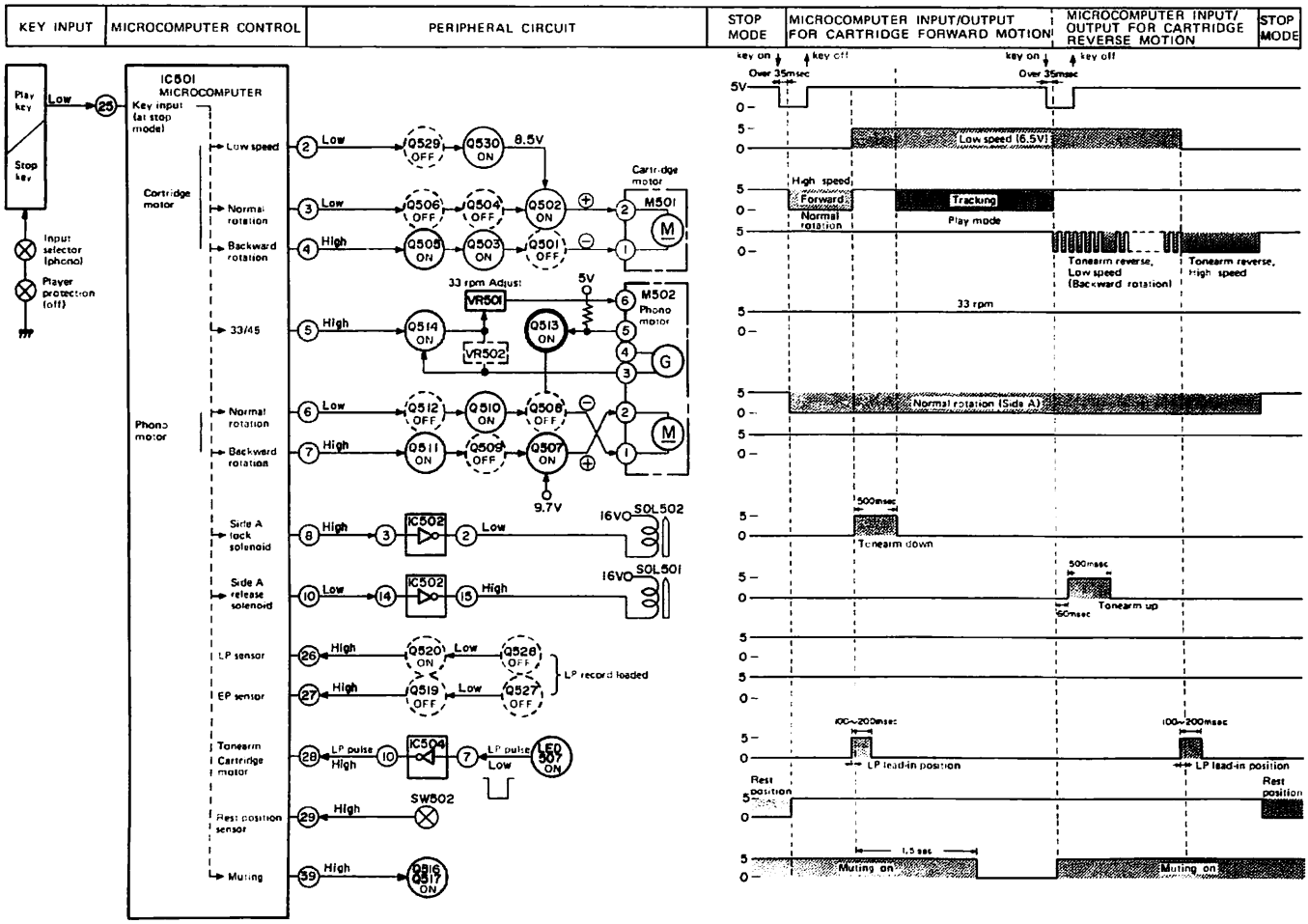

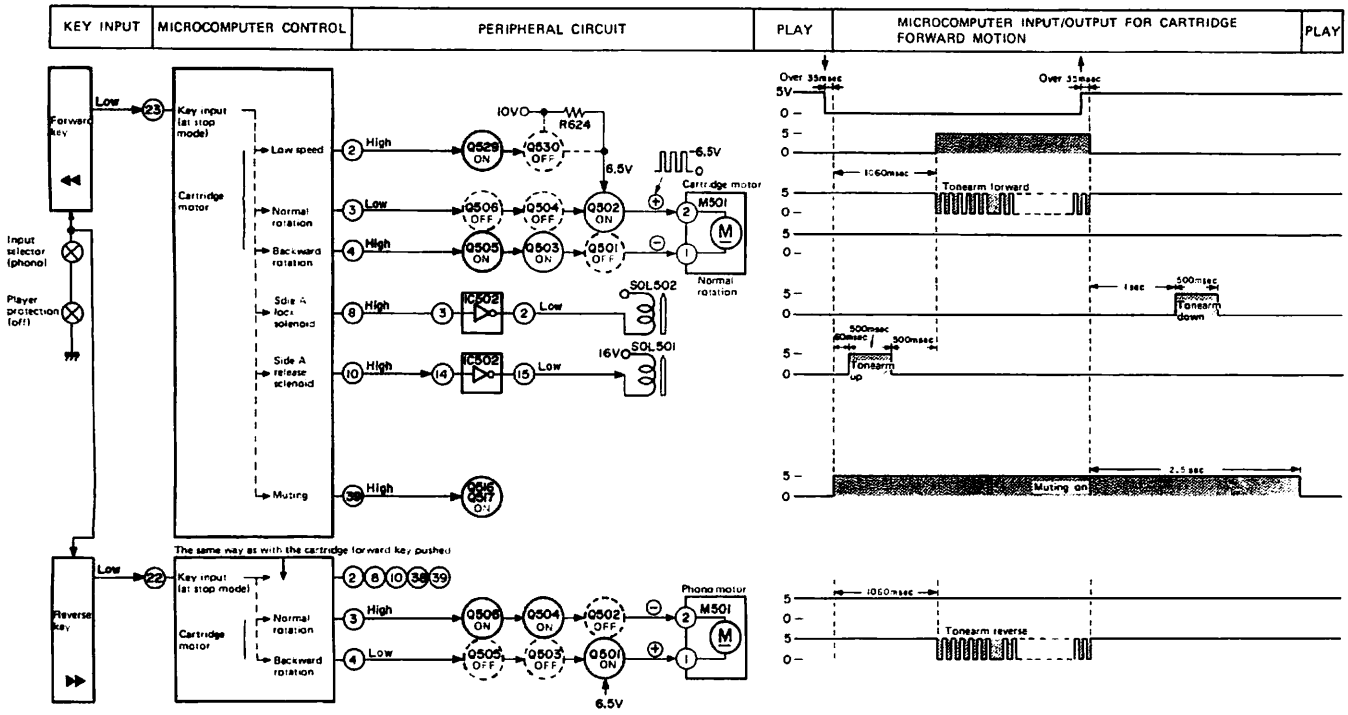
KEY INPUT
MICROCOMPUTER CONTROL
PERIPHERAL CIRCUIT
PLAY
MICROCOMPUTER INPUT/OUTPUT FOR CARTRIDGE FORWARD MOTION
PLAY
Forward key
Reverse key
Input selector (phono)
Player protection (off)
Key input (at stop mode)
Cartridge motor
Low speed
Normal rotation
Backward rotation
Side A lock solenoid
Side A release solenoid
Muting
The same way as with the cartridge forward key pushed
Cartridge motor
M501
Normal rotation
Phono motor
SOL502
SOL501
R624
10V
16V
6.5V
Over 35msec
1060msec
Tonearm forward
Tonearm down
Tonearm up
Tonearm reverse
Muting on
2.5 sec

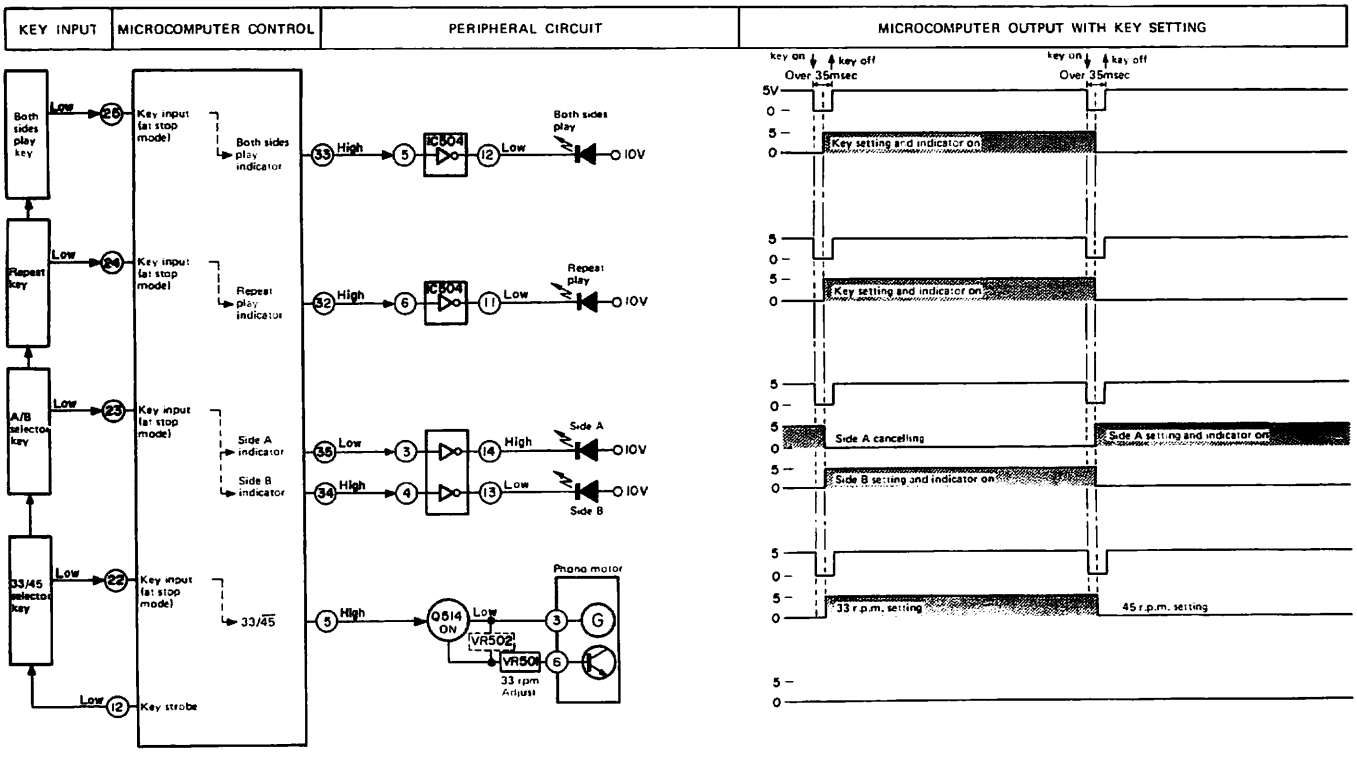
KEY INPUT
MICROCOMPUTER CONTROL
PERIPHERAL CIRCUIT
MICROCOMPUTER OUTPUT WITH KEY SETTING
Both sides play key
Repeat key
A/B selector key
33/45 selector key
Key input (at stop mode)
Key strobe
Both sides play indicator
Repeat play indicator
Side A indicator
Side B indicator
33/45
Both sides play
Repeat play
Side A
Side B
Phono motor
VR502
VR501
33 rpm Adjust
key on
key off
Over 35msec
Key setting and indicator on
Side A cancelling
Side A setting and indicator on
Side B setting and indicator on
33 r.p.m. setting
45 r.p.m. setting

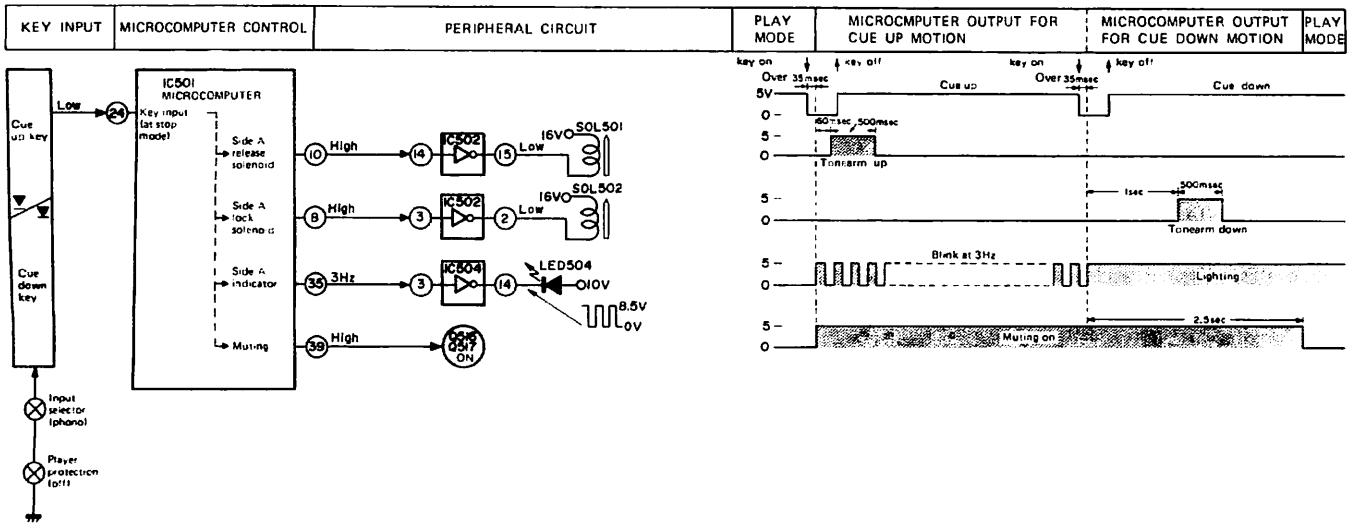

ADJUSTMENT OF TAPE MECHANISM

PINCH ROLLER PRESSURE CHECK

1. Place the unit in PLAY mode.
2. Push the pinch roller, at the point shown in Fig. 19–1, by using a tension gauge (500 gr.) so that it will come off the capstan. Then, release the tension slowly until the pinch roller hits the capstan again (i.e., the pinch roller is about to rotate again). Then check the tension gauge is reading 295 gr. to 365 gr.
3. If the reading is outside the range of 295 gr. to 365 gr. replace the pressure spring of the pinch roller.

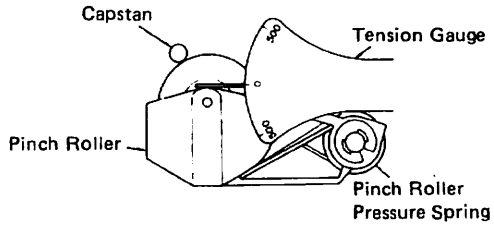

Figure 19–1

TORQUE CHECK AT PLAY, FAST FORWARD AND REWIND MODES

Put a torque meter cassette in the cassette compartment of the set, and see that the measured torque in each mode is normal as follows:

Table 19–1

Mode	Torque meter cassette	Measured torque
Playback	TW-2111	35 ~ 65 gram-cm
Fast-forward	TW-2231	90 ~ 135 gram-cm
Rewind	TW-2231	90 ~ 135 gram-cm

GAP CHECK OF PINCH ROLLER LEVER

Place the set in play mode, and see that the pinch roller lever moves to create the gaps Ⓐ, Ⓑ and Ⓒ as shown in Fig. 19–2.

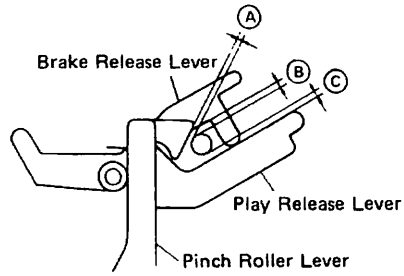

Figure 19–2

RECORD/PLAYBACK HEAD AZIMUTH ADJUSTMENT

As shown in Fig. 19–3, make connection of instruments, and adjust the head azimuth adjusting screw so that Voltmeter reading is maximal, with no phase difference between channels.

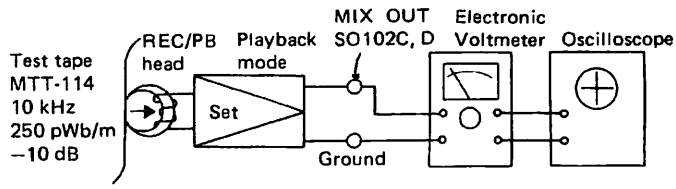

Figure 19–3

TAPE SPEED ADJUSTMENT

As shown in Fig. 19–4, make connection of instruments, put a screwdriver (for high-frequency use) into the hole of the motor, and adjust the variable resistor so that the output frequency is 2970 to 3000 Hz on frequency counter.

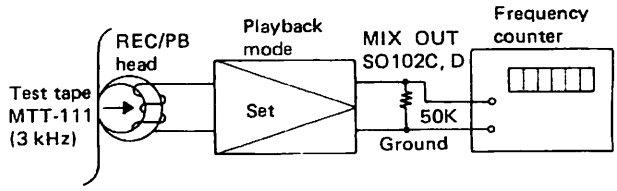

Figure 19–4

ADJUSTMENT OF PLAYER MECHANISM

POSITIONAL ADJUSTMENT OF PLAYER DOOR CLOSE DETECTOR SWITCH

1. Close the player door until it is about to be locked, and check that the player door close detector switch is turned on. Then fix the switch retaining bracket with its screw temporarily.
2. Make the door locked completely, and tighten the screw so that there is a clearance of 1mm at the part Ⓐ shown in Fig. 20–1.

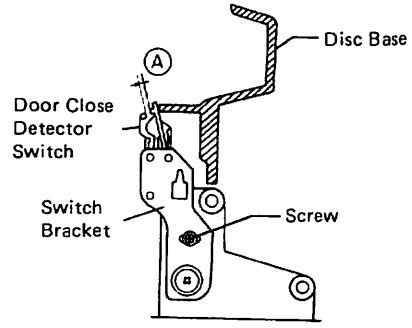

Figure 20–1

POSITIONAL ADJUSTMENT OF TONEARM LEAD-IN POSITION

1. Put an LP record in the unit with the power switch turned on.
2. Push the cue key to set the unit in cue up state.
3. Close the player door, and check that the tonearm moves off the rest position and reaches the LP lead-in position.
4. Operate the cartridge forward key and cartridge reverse key alternately until the tonearm wire tension is constant, and turn off the power switch when the tonearm is at the lead-in position.
5. Loosen the screw at the side A or side B tonearm wire to allow the tonearm to move freely. At the time, hold the tonearm guide not to allow the cartridge stylus to hit the record.
6. Move the tonearm until the cartridge stylus tip is positioned at almost the center of the lead-in groove of the record, and then tighten the tonearm wire screw. Here also hold the tonearm guide not to allow the stylus tip to hit the record.
7. Again turn on the power switch, push the play/cut key and check that the stylus tip descends on the center of the record lead-in groove.
   If not, push the play/cut key again to return the tonearm to the rest position, and repeat steps 2 to 7, or correct it by using the fine adjustment screw.
8. Put an EP record in the unit, and perform the same checking as with an LP record.

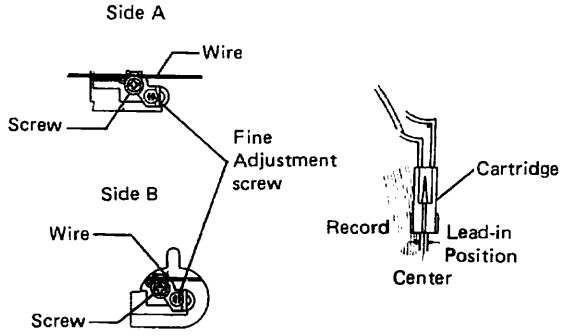

Figure 20–2

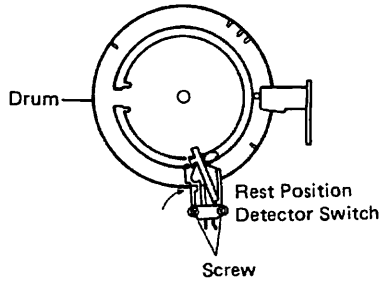

Figure 20–3

POSITIONAL ADJUSTMENT OF REST POSITION DETECTOR SWITCH

1. After the positional adjustment of the tonearm lead-in position, return the tonearm to the rest position and check that the tonearm does not touch the cartridge cushion or the balance cushion.
2. If it touches the cushion, move the rest position detector switch to right and then secure it. See Fig. 20–3.

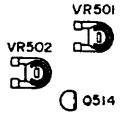

MICROCOMPUTER PWB-EI

Figure 20–4 Adjustment points

ROTATIONAL ADJUSTMENT OF PHONO MOTOR

1. Prepare an LP record which is provided with a strobo viewer, and load it in the unit. Then put the unit in cue up made – by pushing the cue key first and then closing the player door.
2. Adjust variable resistor VR501 or VR502 so that the strobo viewer appears to be still.
   - VR501: at 33 r.p.m. speed
   - VR502: at 45 r.p.m. speed (set by the speed selector key)

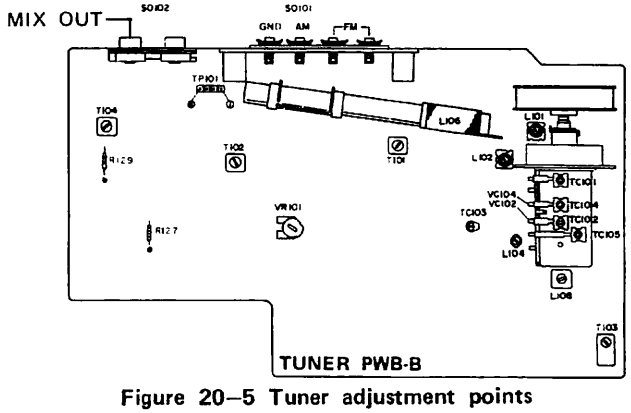

Figure 20–5 Tuner adjustment points

ADJUSTMENT OF TUNER CIRCUIT

AM IF/RF ADJUSTMENT

- Set the function selector switch at AM position.
- Set the signal generator to produce a signal of 400Hz, 30%, AM modulated.

STEP	TEST STAGE	FRE-QUEN-CY	DIAL POINTER SETTING	AD-JUST-MENT	REMARKS
IF (Make connection of instruments as shown if Fig. 21–1.					
1	IF	455kHz	High Frequency	T102, T103	Turn the cores of T102 and T103 until IF waveform is maximal as shown in Fig. 21–2. Repeat this twice or three times to obtain best resalt.
RF (Make connection of instruments as shown in Fig. 21–3.					
2	Band coverage	515kHz	Lowest frequency	L108	Adjust for maximal output.
3		1650kHz	Highest frequency	TC105	
4	Tracking	600kHz	Tune to 600 kHz	L106	
5		1400kHz	Tune to 1400 kHz	TC104	
6	Repeat steps 2, 3 and 4, 5 until no further improvement can be made.				

FM IF/RF ADJUSTMENT

- Set the function selector switch at FM position.
- Set the signal generator to produce a signal of 400Hz, 75kHz dev, FM modulated.

STEP	TEST STAGE	FRE-QUEN-CY-	DIAL POINTER SETTING	AD-JUST-MENT	REMARKS
IF (Make connection of instruments as shown in Fig. 21–4.					
1	IF	10.7MHz	High frequency	T101	Turn the core of T101 until wave-form is symmetrical in right and left as shown in Fig. 21–5.
2	Detec-tion			T104	Turn the core of T104 until wave-form is symmetrical in the upper and lower with best linearity ("S"curve), as shown in Fig. 21–6.
3	Repeat steps 1 and 2 until no further improvement can be made.				
RF (Make connection of instruments as shown in Fig. 21–7.					
4	Band coverage	108.3MHz	Highest frequency	TC103	Adjust for maximal output
5		87.3MHz	Lowest frequency	L104	
6	Tracking	90MHz	Tune to 90MHz	L101, L102	
7		106MHz	Tune to 106MHz	TC101, TC102	
8	Repeat steps 4, 5 and 6, 7 until no further improvement can be made				

VCO FREQUENCY ADJUSTMENT

- Set the function selector switch at FM stereo position.
- Set the signal generator to produce a signal of 400Hz, 75kHz dev, FM modulated (mono signal)
- Make connection of instruments as shown in Fig. 21–8.

FREQUENCY	DIAL POINTER SETTING	ADJUST-MENT	REMARKS
98MHz at 60dB	Tune to 98MHz	VR101	Adjust VR103 so that frequency coun-ter reads 19kHz ± 19Hz.

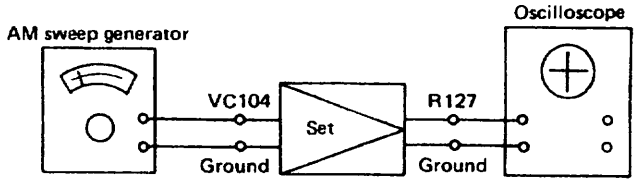

Figure 21–1 AM IF Adjustment

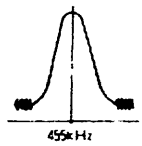

Figure 21–2 AM IF Curve

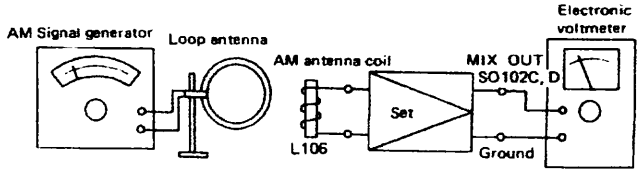

Figure 21–3 AM RF Adjustment

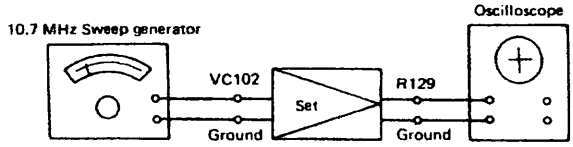

Figure 21–4 FM IF Adjustment

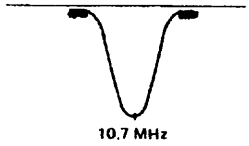

Figure 21–5 FM IF Curve

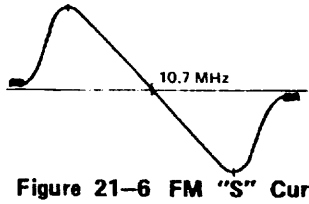

Figure 21–6 FM "S" Curve

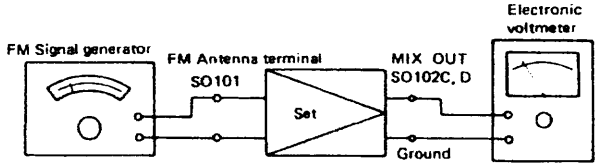

Figure 21–7 FM RF Adjustment

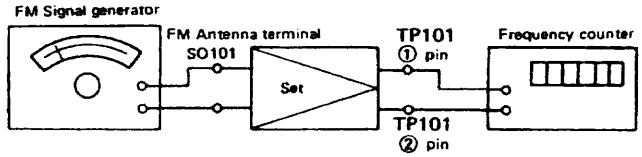

Figure 21–8 VCO Frequency Adjustment

ADJUSTMENT AND CHECK OF RECORD/PLAYBACK AMPLIFIER

BIAS CURRENT ADJUSTMENT

- Make connection of instruments as shown in Fig. 22–1, and adjust variable resistor VR205 or VR206 so that bias current available with the tape selector switch set at each position is shown in Table 22–1.

Table 22–1

Tape selector switch	Voltage (Bias current)	Adjustment
Normal	42 mV (420 μA)	VR205 (L-ch), VR206 (R-ch)
CrO_2	56 ~ 64 mV (560 ~ 640 μA)	Checking
Metal	74 ~ 86 mV (740 ~ 860 μA)	

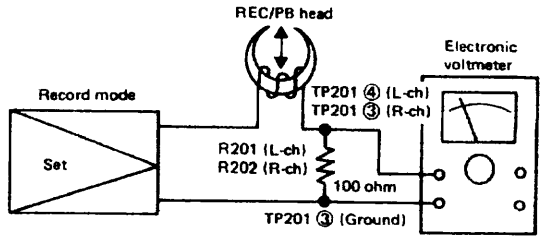

Figure 22–1

ERASE CURRENT CHECK

- Make connection of instruments as shown in Fig. 22- 2, and check if the erase current is as shown in Table 22–2.

Table 22–2

Tape selector switch	Voltage (erase current)
Metal	120 ~ 160 mV (120 ~ 160 mA)

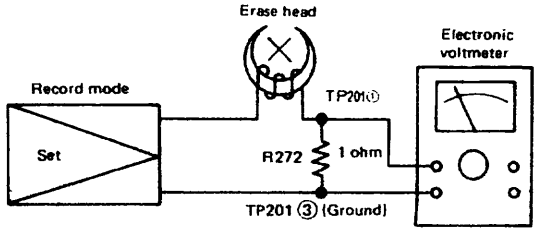

Figure 22–2

PLAYBACK SENSITIVITY ADJUSTMENT

- Make connection of instruments as shown in Fig. 22–3, and adjust variable resistor VR201 or VR202 so that the playback sensitivity is as shown in Table 22–3.

Table 22–3

Switch	Voltage	Adjustment
Tape selector switch at "normal" Dolby NR switch at "off"	580 mV	VR201 (L-ch), VR202 (R-ch)

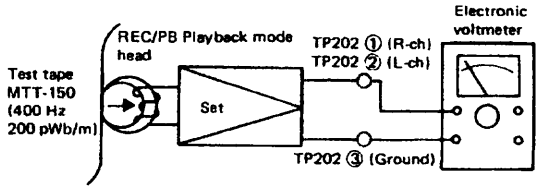

Figure 22–3

RECORD/PLAYBACK SENSITIVITY ADJUSTMENT

- Make connection of instruments as shown in Fig. 22–4, adjust variable resistor VR303, VR304, VR203 or VR204 so that the record/playback sensitivity is as shown in Table 22–4.

Table 22–4

Step	Switch	Voltage	Adjustment
Record	Tape selector switch at "normal" Dolby NR switch at "off"	150 mV	Record level controls VR303 (L-ch), VR304 (R-ch)
Play-back		140 ~ 160 mV	VR203 (L-ch), VR204 (R-ch)

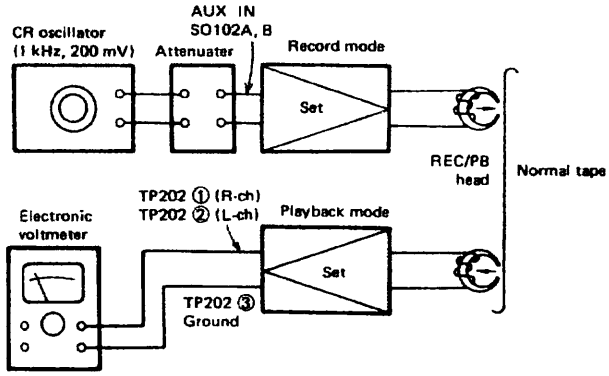

Figure 22–4

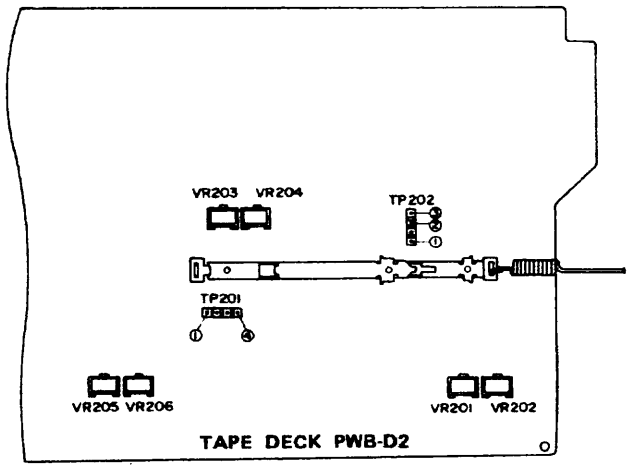

Figure 22–5 Adjustment points

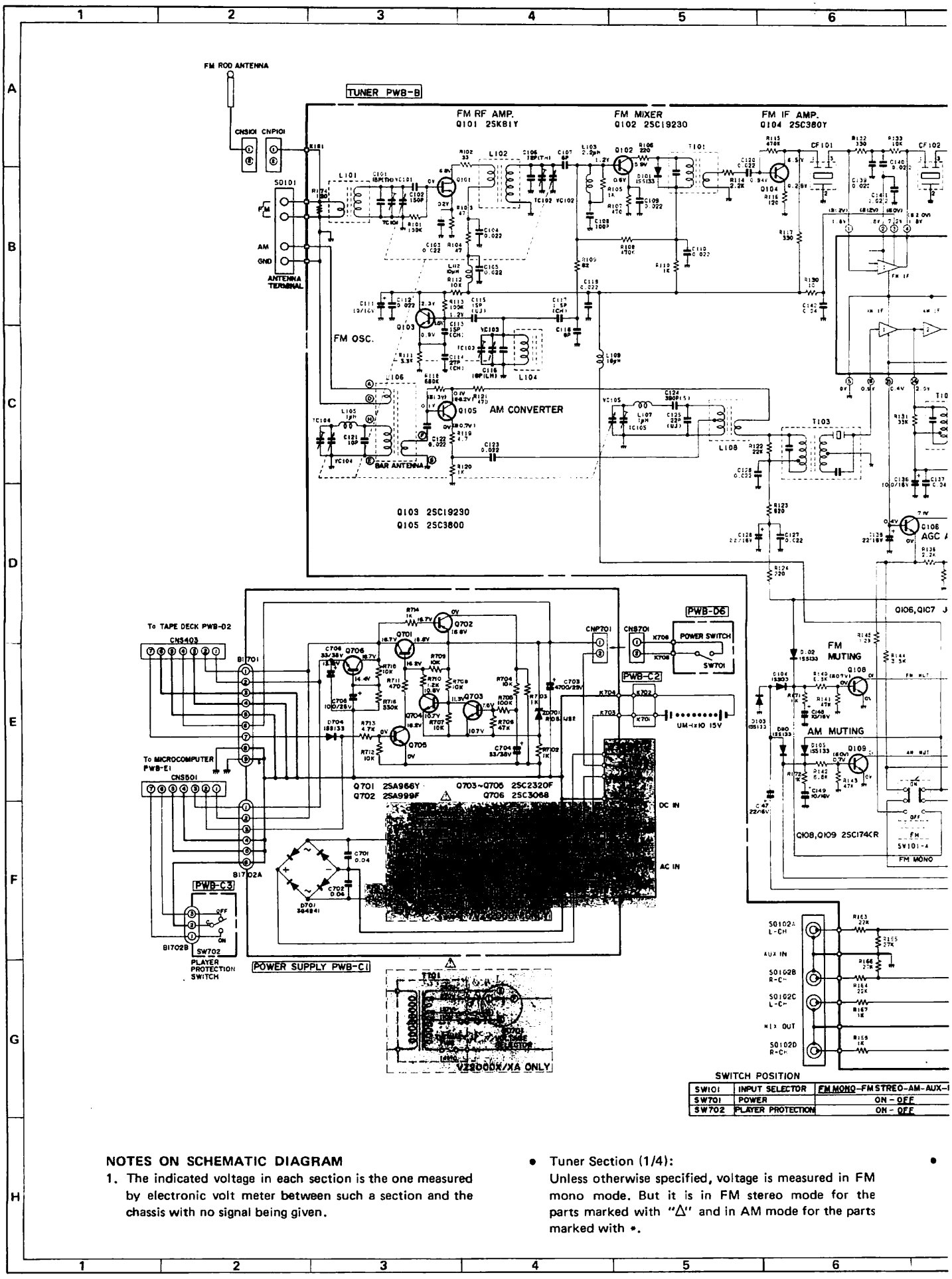

NOTES ON SCHEMATIC DIAGRAM

1. The indicated voltage in each section is the one measured by electronic volt meter between such a section and the chassis with no signal being given.

- Tuner Section (1/4):
  Unless otherwise specified, voltage is measured in FM mono mode. But it is in FM stereo mode for the parts marked with "Δ" and in AM mode for the parts marked with *.

Figure 23 SCHEMATIC DIAGI

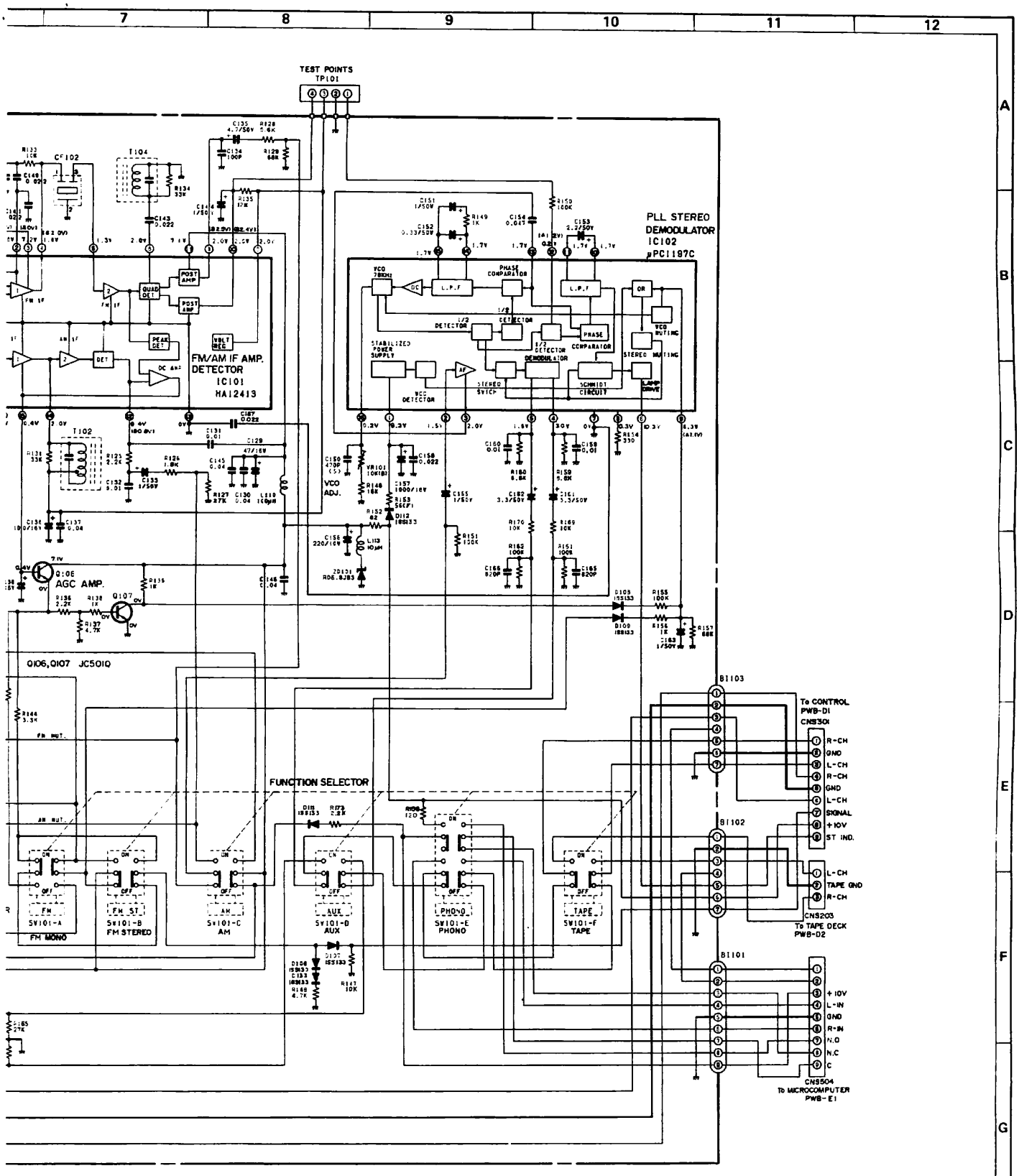

STREO-AM-AUX-PHONO-TAPE
ON-OFF
ON-OFF

- Microcomputer section (4/4):
  Unless otherwise specified, voltage is measured with the player switch set at "on" position, no record loaded, the door closed and the tonearm at the rest position. Voltage with a tracking error caused is indicated by the mark ⋆.

2. Parts marked with "⚠" (▭) are important for maintaining the safey of the set. Be sure to replace these parts with specified ones for maintaining the safety and performance of the set.
3. Specifications or wiring diagrams of this model are subject to change for improvement without prior motice.

'IC DIAGRAM (1/4)

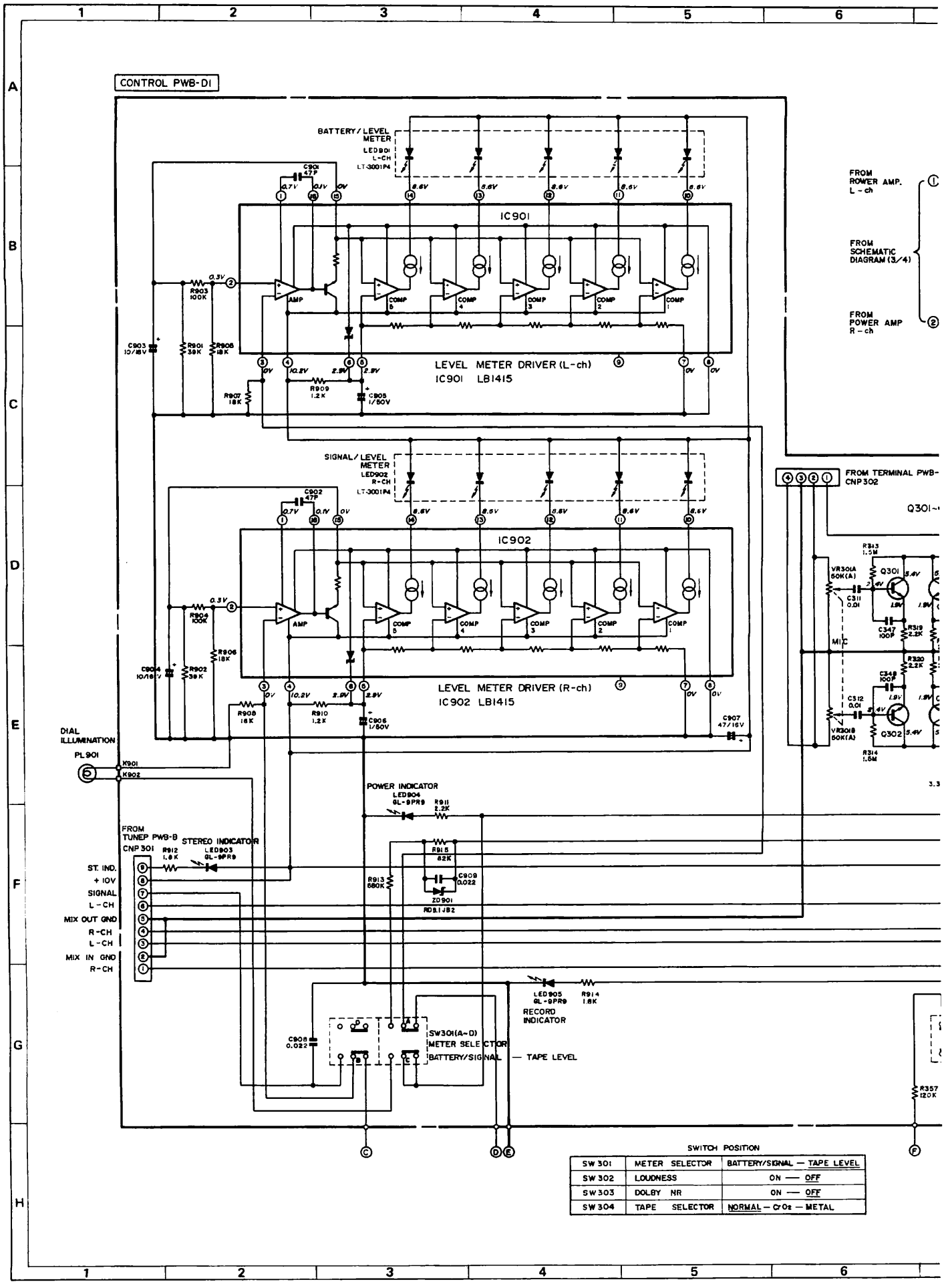

Figure 25 SCHEM.

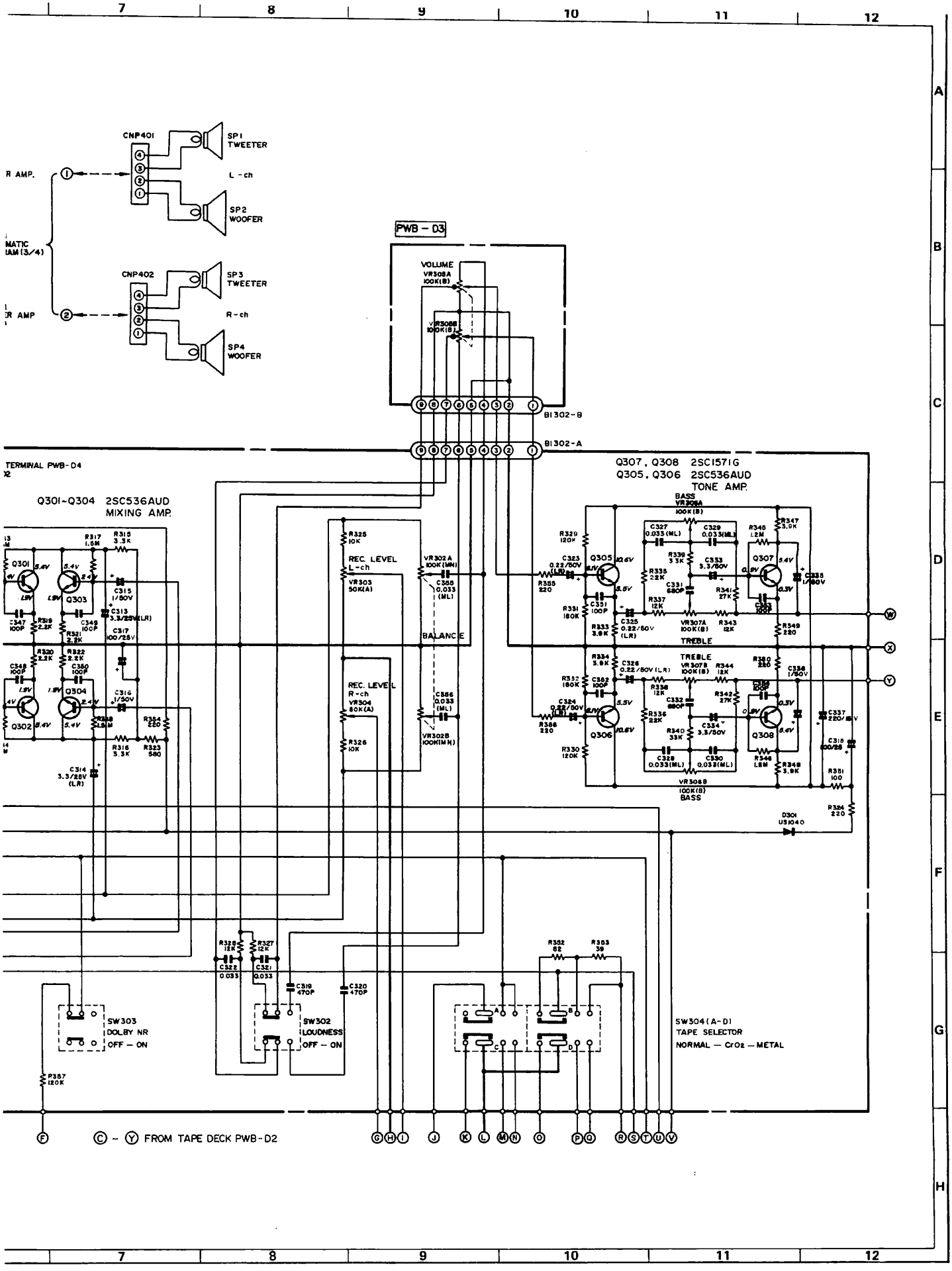

SCHEMATIC DIAGRAM (2/4)

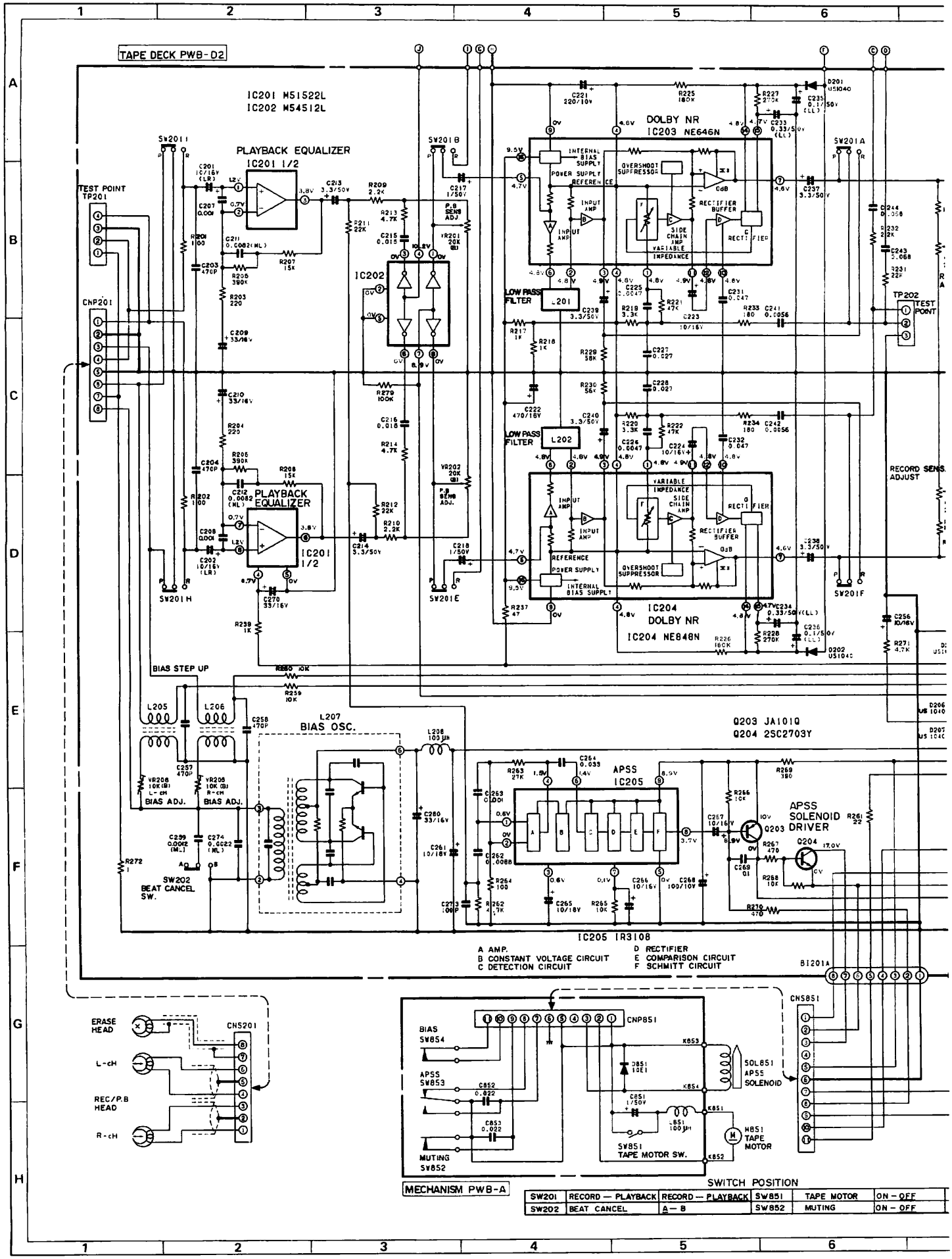

SWITCH POSITION

SW201	RECORD — PLAYBACK	RECORD — PLAYBACK	SW851	TAPE MOTOR	ON – OFF
SW202	BEAT CANCEL	A — B	SW852	MUTING	ON – OFF

Figure 27 SCHEMATIC DIAGR

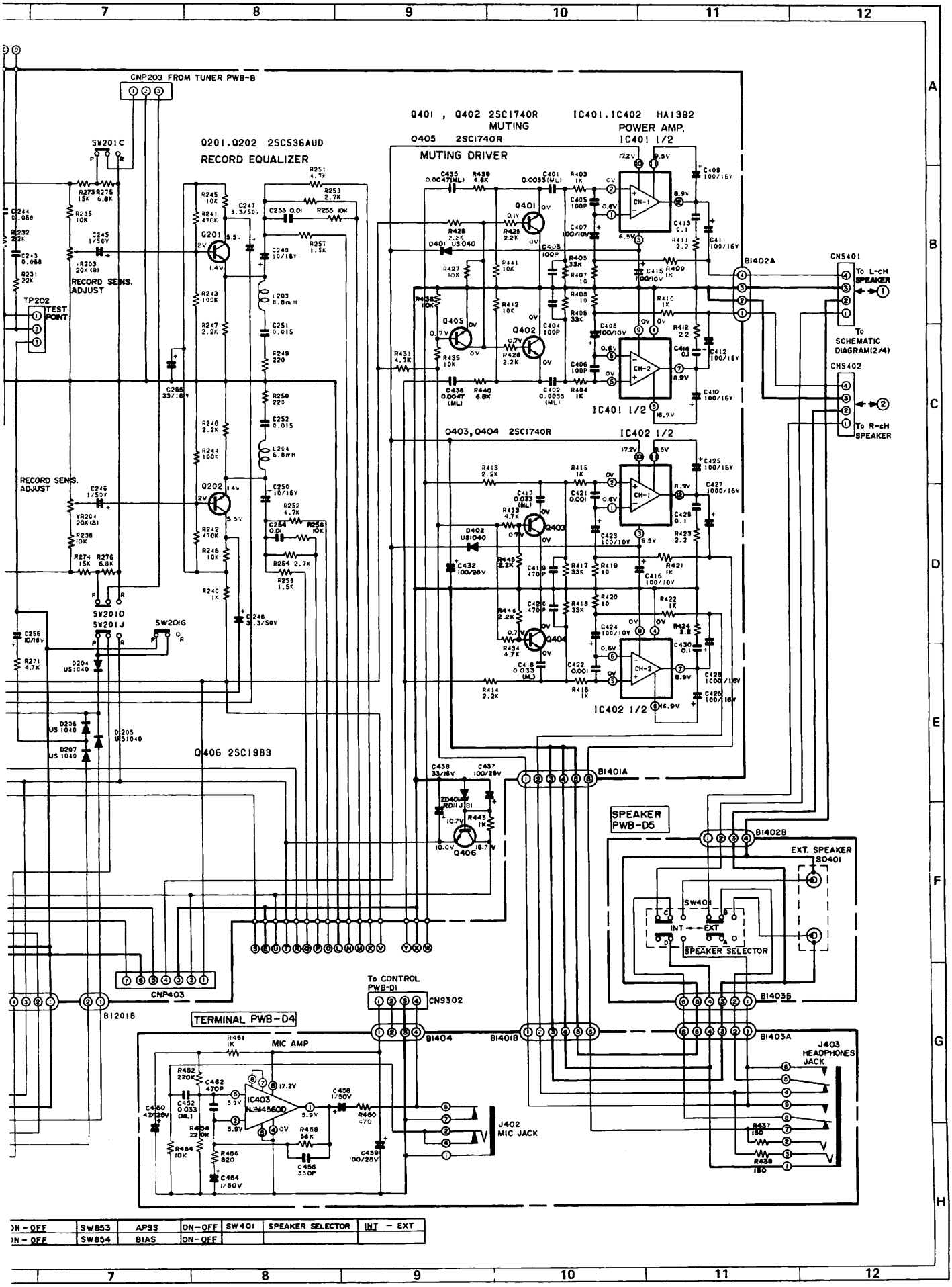

ON-OFF	SW853	APSS	ON-OFF	SW401	SPEAKER SELECTOR	INT - EXT
ON-OFF	SW854	BIAS	ON-OFF			

C DIAGRAM (3/4)